FLAIL TRIMMERS -

460S 520S 580S

Edition No: 8177-02-99

PARTS LIST

Always order Twose genuine spares for your machine. They are correctly designed to give the best operational results.

When ordering spare parts, please specify:-

Type and Serial Number of machine
Part number, description and quantity of spares required.

Always make sure that you have ordered a sufficient quantity to complete the job.

Always make sure that you have ordered the correct parts. In some instances (eg Hydraulic Rams) parts or assemblies are, in the course of time, modified due to introduction of new materials, or improved design.

Always state by what means you wish the goods to be sent. In the absence of specific instructions consignments will be sent by post or railways goods service, if it is not possible to deliver by our own transport.

Always State the number of our Invoice or Sales Slip, and the reason for return should it become necessary to return any items for exchange or credit.

WARRANTY AND SPARE PARTS

all enquiries regarding these machines and orders for spare parts must be addressed to:-

TWOSE OF TIVERTON LIMITED
BLUNDELLS ROAD
TIVERTON
DEVON
EX16 4JT

TELEPHONE (01884) 253691
FAX (01884) 255189

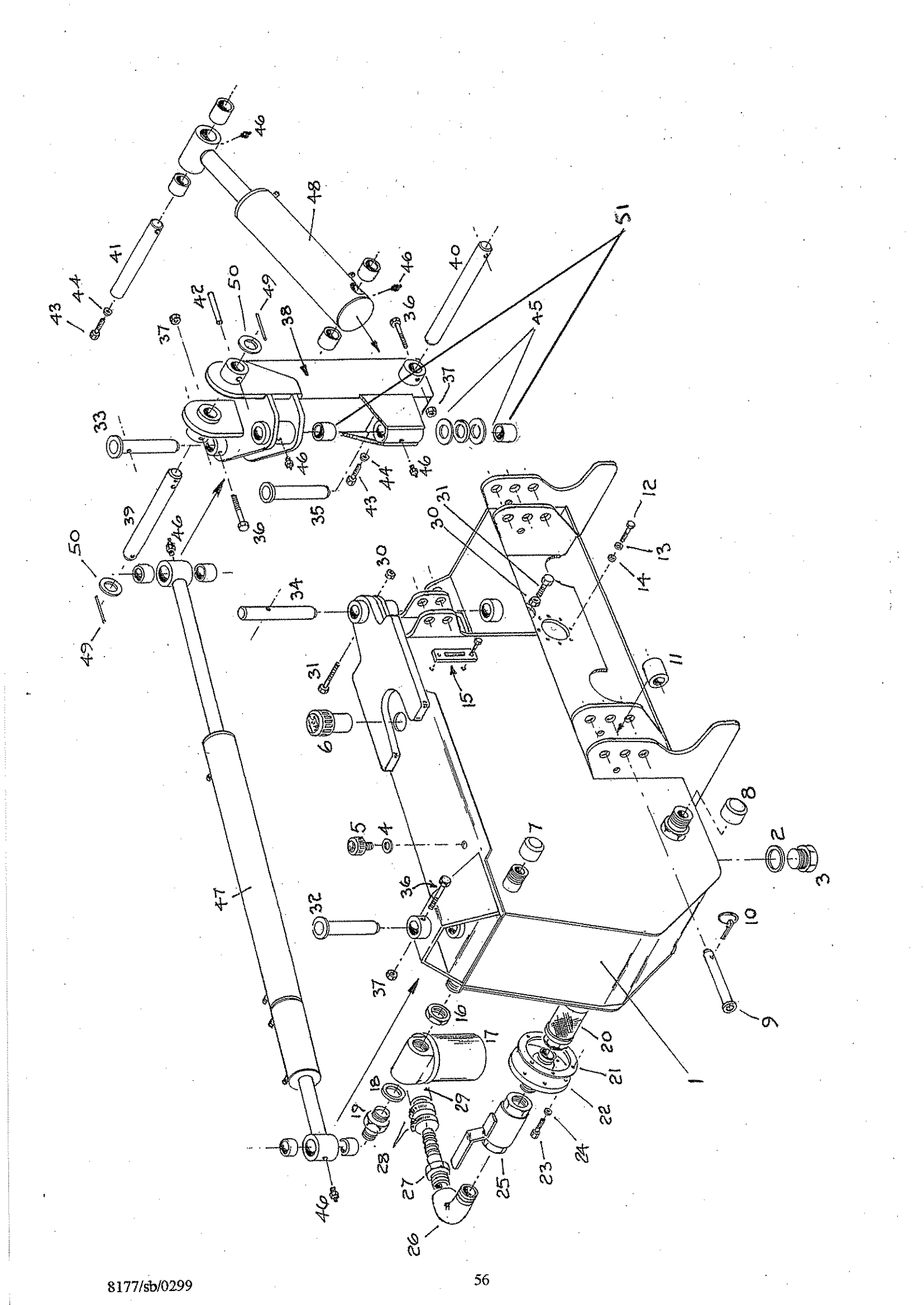
1
2
3
4
5
6
7
8
9
10
11
12
13
14
15
16
17
18
19
20
21
22
23
24
25
26
27
28
29
30
31
32
33
34
35
36
37
38
39
40
41
42
43
44
45
46
47
48
49
50
51

MAIN TANK -FRAME, AND SWIVEL

ITEM	PART NO.	DESCRIPTION		QTY
1	194.001	Maintank - frame		1
2	3078	Seal 1 1/2" BSP		1
3	7894	Plug 1 1/2" BSP		1
4	1181	Seal 1/4"		1
5	8155	Breather SAB.3101		1
6	8154	Filler/Breather, pressurised		1
7	8157	Cap 1 1/4" BSP		1
8	8158	Cap 1 1/2" BSP		1
9	194.052	Lower Link Pin		2
10	0832	Linch pin 7/16		2
11	184.308	Lower link spacer		2
12	2950	Setscrew M12 x 30 8.8	) PTO	4
13	2729	Spring Washer M12	) GEARBOX	4
14	2716	Flatwasher M12	) TO FRAME	4
15	5371	Oil level gauge		1
16	8043	Backnut 1 1/2" BSP		1
17	7576	Filter 10 Micron MXA, 955.424		1
18	3155	Seal 1 1/4" BSP		1
19	5241	Adaptor 1 1/4" x 1" BSP		1
20	3717	Strainer (in tank) Suction (1 1/2" BSP)		1
21	1840402	Gasket		1
22	184.398	Cover Disc		1
23	2917	Setscrew M10 x 25 (8.8)		6
24	2728	Spring washer M10		6
25	7619	Tap		1
26	8002	Adaptor 1 1/2" BSP M-F T90		1
27	7999	Hose Tail 1 1/2 BSP		1
28	7455	Jubilee Clips		4
29	8000	Suction Hose x 560 Long		1
30	3082	Stiffnut (M12) Nyloc		2
31	3014	Bolt M12 x 90 (8.8)		2
32	194.020	Pin B.B. Ram 'Tank'		1
33	194.021	Pin B.B. Ram 'Spine'		1
34	184.011	Pin - Spine 'Top'		1
35	194.012	Pin - Spine 'Base'		1
36	2994	Bolt M10 x 75 (8.8)		3

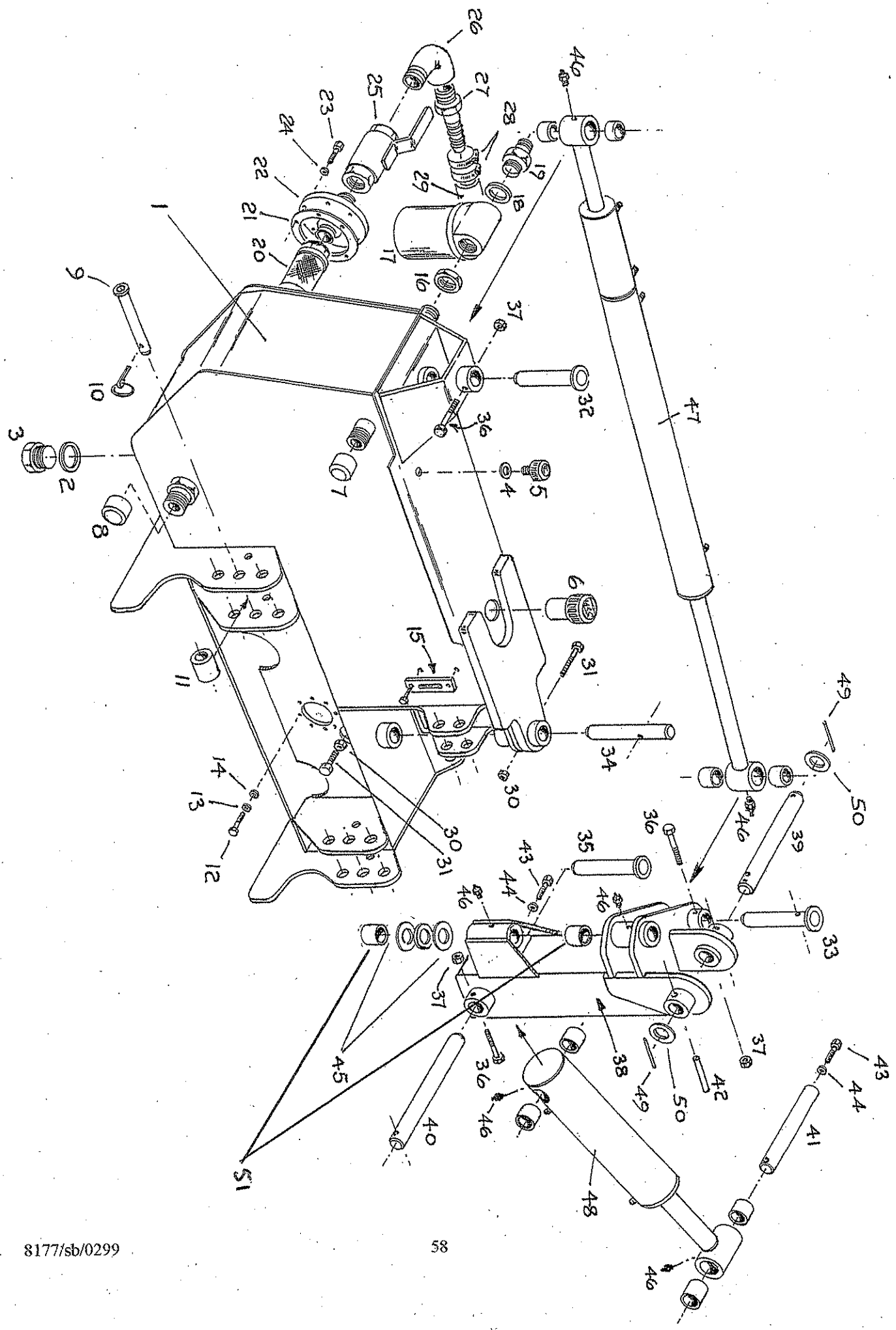
1
2
3
4
5
6
7
8
9
10
11
12
13
14
15
16
17
18
19
20
21
22
23
24
25
26
27
28
29
30
31
32
33
34
35
36
37
38
39
40
41
42
43
44
45
46
47
48
49
50
51

MAIN TANK -FRAME, AND SWIVEL CONTINUED

ITEM	PART NO.	DESCRIPTION	QTY
37	4421	Stiffnut M10 (Nyloc)	3
38	194.028	Spine	1
39	194.013	Pin (Rocker)	1
40	194.015	Pin (1st Ram) Anchor	1
41	194.014	Pin (1st Ram) Rod	1
42	8013	Roll pin M12 x 90	1
43	2917	Setscrew M10 x 25	2
44	2728	Spring Washer M10	2
*	194.057	Main ram stay	1
45	194.054	Thrust Assembly (194.054.001) x 1 + (8031) x 2	1
46	2923	Grease Nipple M10 'straight'	6
47	1940047	Breakback Ram	1
		(see separate page for breakdown of components)	
48	1940045	1st Ram (primary)	1
*	1940045.1	Seal set for 1940045	
*	1940045.2	Rod complete for 1940045	
*	1940045.3	Gland nut for 1940045	
*	1940045.4	Set of bushes for 1940045	
49	7920	Spring pin M8 x 60	2
50	6541	Washer M39 Form E	2
51	6257G	Bush 4040M Bronze/Steel	2

* = Not illustrated

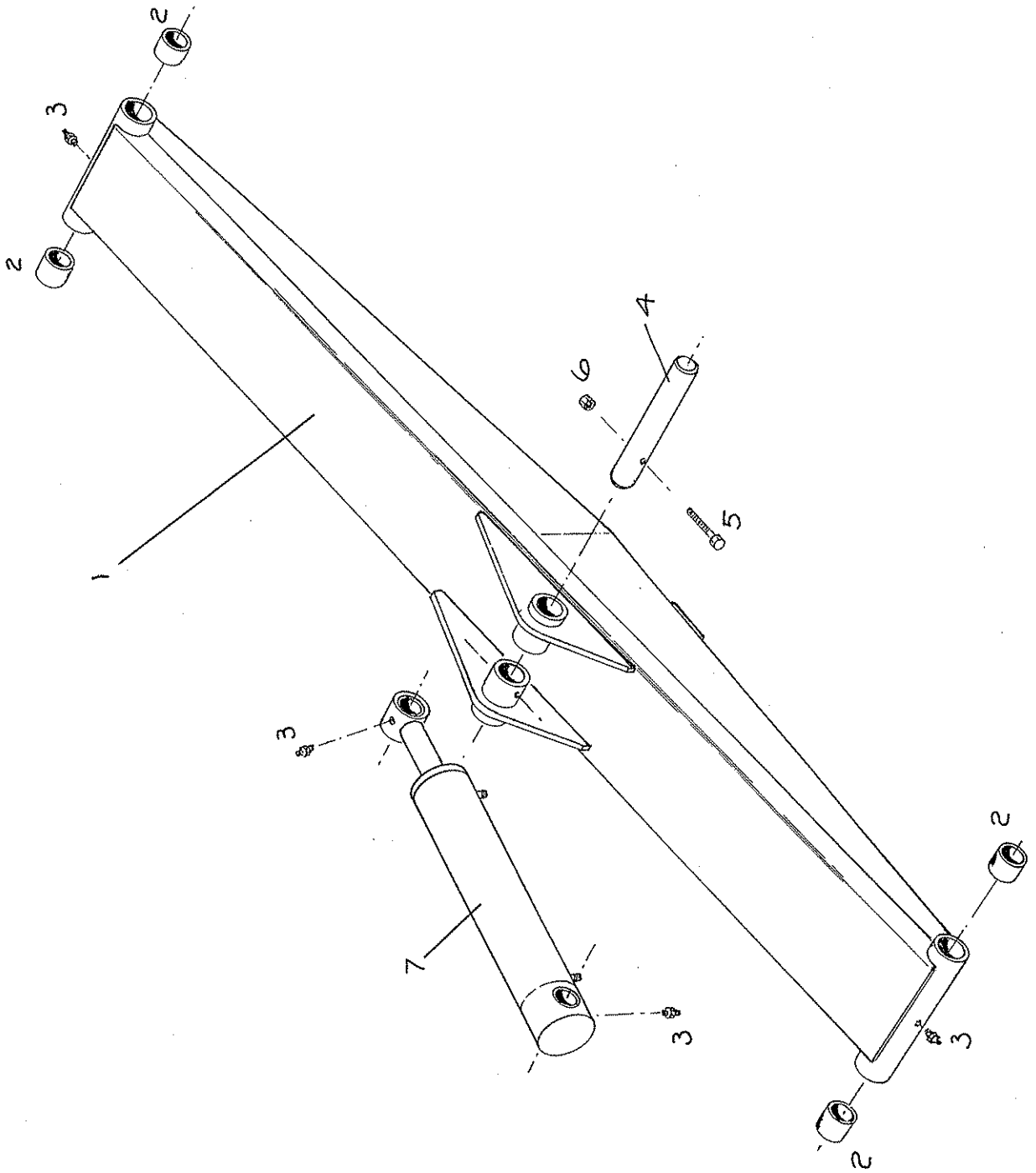
1
2
2
3
3
3
3
4
5
6
7
2
2

FIRST BOOM

ITEM	PART NO.	DESCRIPTION	QTY
1	194.095	1st Boom 460S	1
or	194.096	1st Boom 520S	1
or	194.097	1st Boom 580S	1
2	6257G	Bush 4040M	4
3	2923	Grease Nipple M10 straight	4
4	194.018	Pin	1
5	2994	Bolt M10 x 75	1
6	4421	Stiffnut M10 'Nyloc'	2
7	1940094	Ram 2nd	1
*	1940094.1	Seal set	
*	1940094.2	Rod complete	
*	1940094.3	Gland nut	
*	1940094.4	Set of bushes	

* = Not illustrated

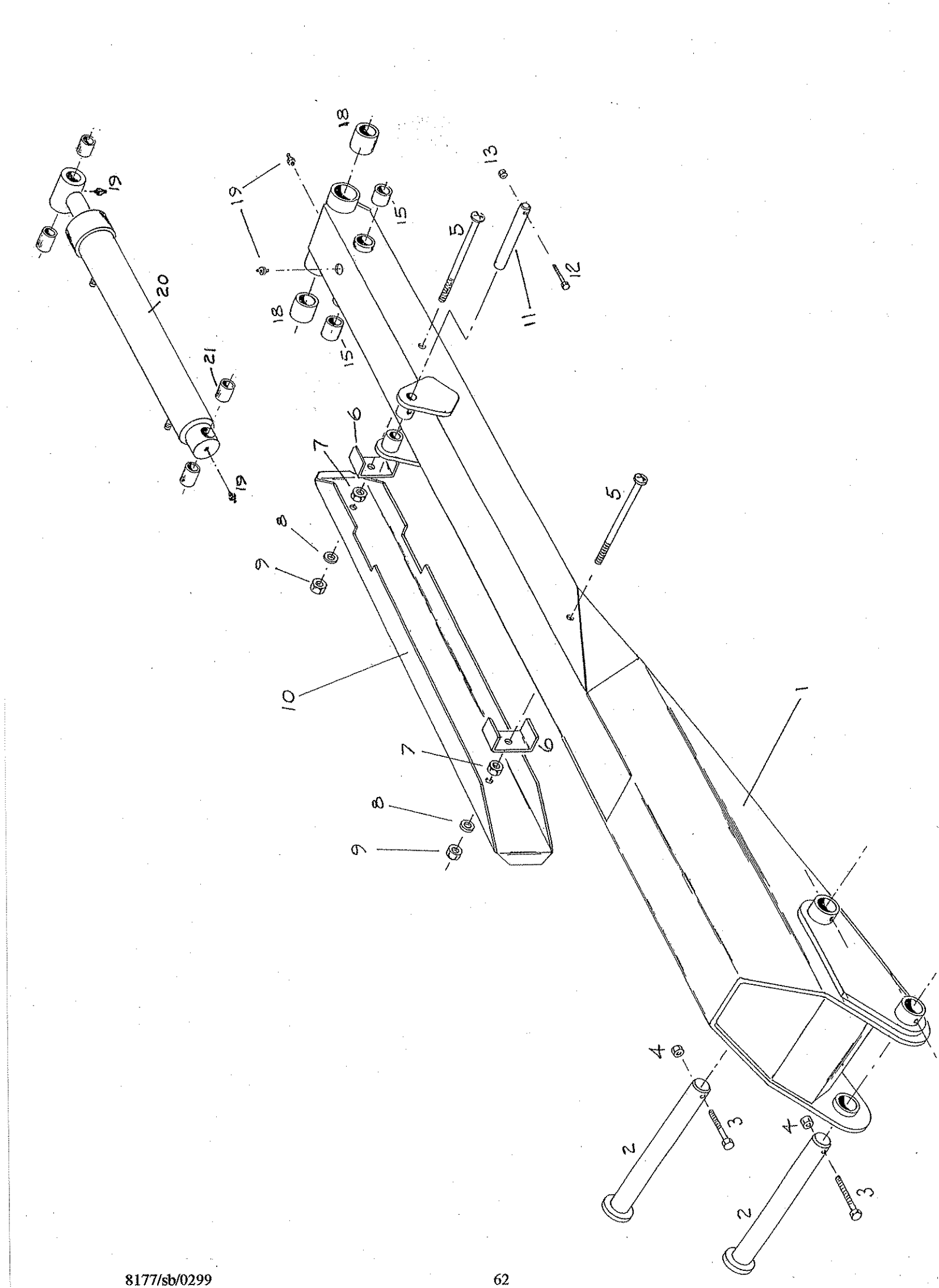
1
2
3
4
5
6
7
8
9
10
11
12
13
15
18
19
20
21

OUTER BOOM

ITEM	PART NO.	DESCRIPTION	QTY
1	194.099	2nd boom 460S	1
or	194.024	2nd boom 520S	1
or	194.027	2nd boom 580S	1
2	194.016	Pin	2
3	2994	Bolt M10 x 75 (8.8)	2
4	4421	Stiffnut M10 (Nyloc)	2
5	8069	Bolt M10 x 180 (Roofing)	2
6	194.053	Hose Clamp	2
7	2799	Nut, M10 fullnut	2
8	3332	Washer M10 flat form 'C'	2
9	4421	Stiffnut M10 (Nyloc)	2
10	194.110	Cover, 2nd Boom 460S	1
or	194.043	Cover, 2nd Boom 520S	1
or	194.041	Cover, 2nd Boom 580S	1
11	184.492C	Pin	1
12	3548	Bolt M8 x 50 (8.8)	1
13	3182	Stiffnut M8 (Nyloc)	1
15	3124	Bush 3040M	2
18	7900	Bush 5040M	2
19	2923	Grease Nipple M10 straight	4
20	1840493	Ram (head angle)	1
21	8039	Bush 2520M	4
*	1840493.1	Seal Set for ram 1840493	
*	1840493.2	Rod complete for 1840493	
*	1840493.3	Gland nut for 1840493	
*	6948	Adaptor 1/4" BSP M/FLN 91	2

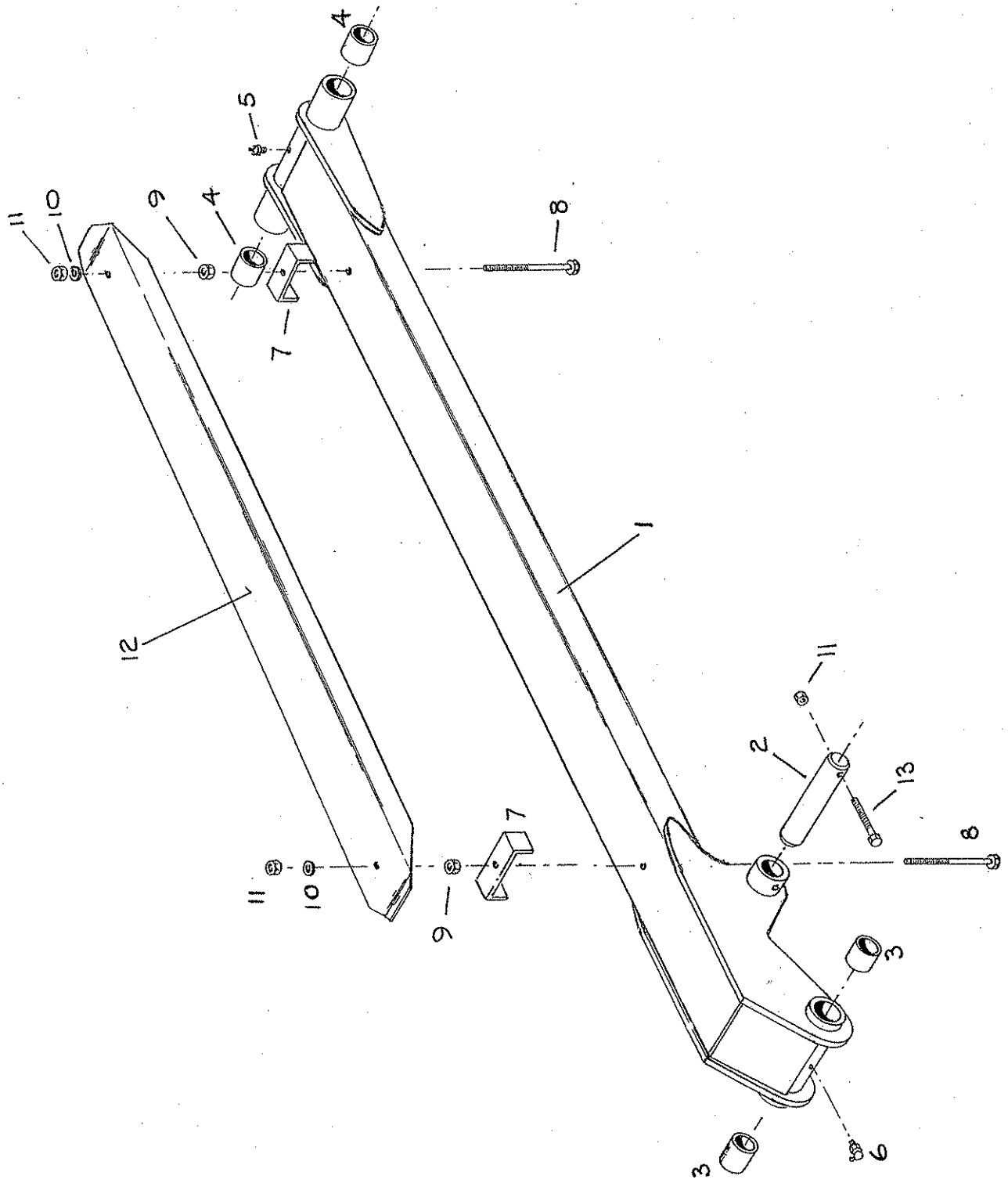
4
5
11
10
9
4
8
7
1
12
11
2
13
7
8
11
10
9
3
3
6

TIE ARM AND COVER

ITEM	PART NO.	DESCRIPTION	QTY
1	194.102	Tie Arm 460S	1
or	194.103	Tie Arm 520S	1
or	194.104	Tie Arm 580S	1
2	194.017	Pin	1
3	7488	Bush	2
4	6257G	Bush	2
5	2923	Grease Nipple M10 'straight'	1
6	2944	Grease Nipple M10 '90°'	1
7	194.053	Hose Clamp	2
8	3343	Bolt M10 x 110 (8.8)	2
9	2799	Nut M10 (Fullnut)	2
10	3332	Washer M10 float (form C)	2
11	4421	Stiffnut M10 (Nyloc)	3
12	194.110	Cover, tie arm 460S	1
or	194.103	Cover, tie arm 520S	1
or	194.104	Cover, tie arm 580S	1
13	2994	Bolt M10 x 75 (8.8)	1

TELESCOPIC CRANKED BOOM

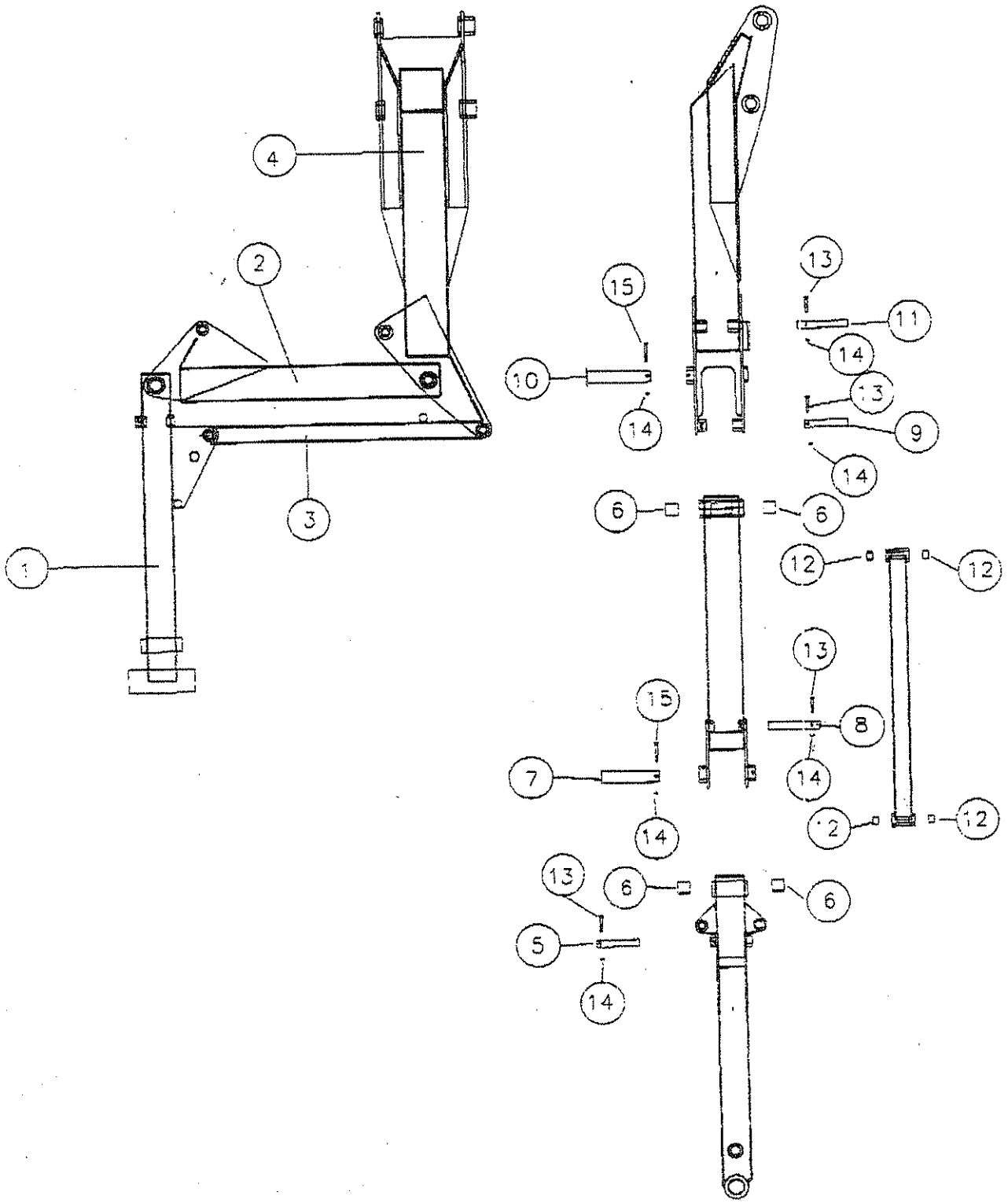

TELESCOPIC CRANKED BOOM

ITEM	PART NUMBER	DESCRIPTION	QTY
1	194.072L/R	OUTER BOOM	1
2	194.071	CENTRE BOOM	1
3	194.073	PARALLEL ARM	1
4	194.100L/R	INNER SECOND BOOM	1
5	194.078	ø25 EN8 x 142 9XD	1
6	6257G	BUSH 4040	4
7	194.079	ø40 EN8 x 198 9XD	1
8	194.076	ø25 EN8 x 172 9XD	1
9	194.080	ø25 EN8 x 147 9XD	1
10	194.075	ø40 EN8 PIVOT PIN	1
11	194.077	ø25 EN8 x 142 9XD	1
12	T8039	BUSH 2520M	4
13	9213104	M8 x 50	4
14	9143004	M8 NYLOCK	6
15	9213124	M8 x 60	2

TWOSE

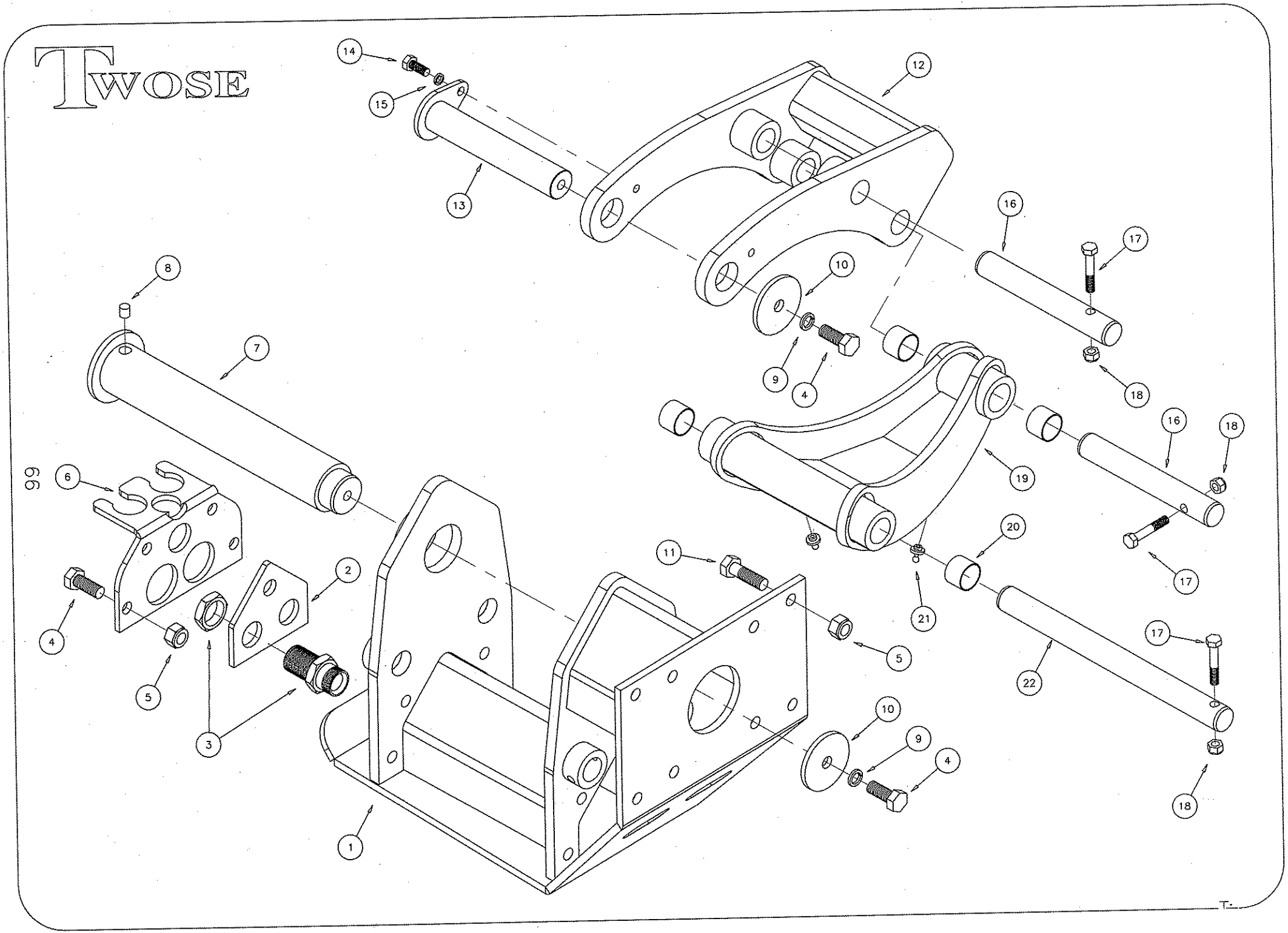
14
15
12
13
16
17
8
10
7
9
4
18
16
18
6
19
20
11
2
17
21
4
5
17
5
22
3
10
9
4
18
1

HEAD ANGLING

ITEM	PART NO.	DESCRIPTION	QTY
1	194.105	Shoe	1
2	194-114-	Plate pipes	1
3	8085	Bulkhead fitting 3/4" c/w nut	2
4	2950	Setscrew M12 x 30 (8.8)	6
5	3082	Stiffnut M12 Nyloc	12
6	194.106	Bracket pipes	1
7	194.107	Pin Head Pivot	1
8	7760	Sock Screw M10 * 12 Dog 1 pitch	1
9	2729	Washer M12 Spring	2
10	184-461-	Washer M12 Special	2
11	2733	Bolt M12 x 40 (8.8)	8
12	194.116	Banana 1st	1
13	194.117	Pin banana pivot	1
14	4923	Setscrew M 8 x 12 (8.8)	1
15	3001	Washer M 8 Spring	1
16	194.036	Pin banana	2
17	3548	Bolt M 8 x 50 (8.8)	3
18	3182	Stiffnut M 8 Nyloc	3
19	194.109	Banana 2nd	1
20	8039	Bush 2520M	4
21	2923	G/Nipple M10 x 1.5	2
22	194.108	Pin 2nd Banana	1

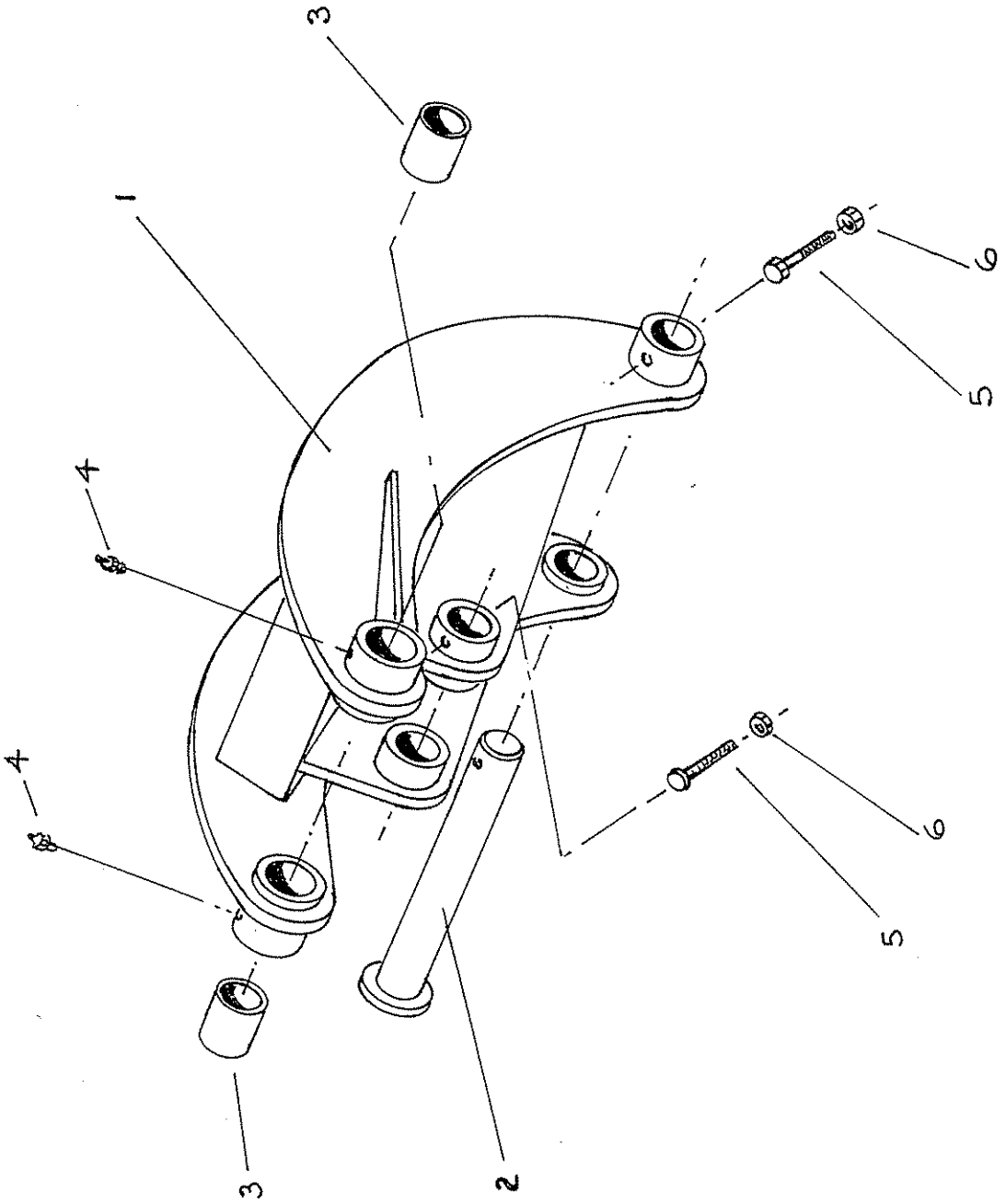
3
1
4
4
3
2
5
6
5
6

ROCKER

ITEM	PART NO.	DESCRIPTION	QTY
1	194.098	Rocker	1
2	194.016	Pin	1
3	8153	Bush (4550M)	2
4	2923	Grease Nipple (M10 straight)	2
5	2994	Bolt M10 x 75 (8.8)	2
6	4421	Stiffnut M10 (Nyloc)	2

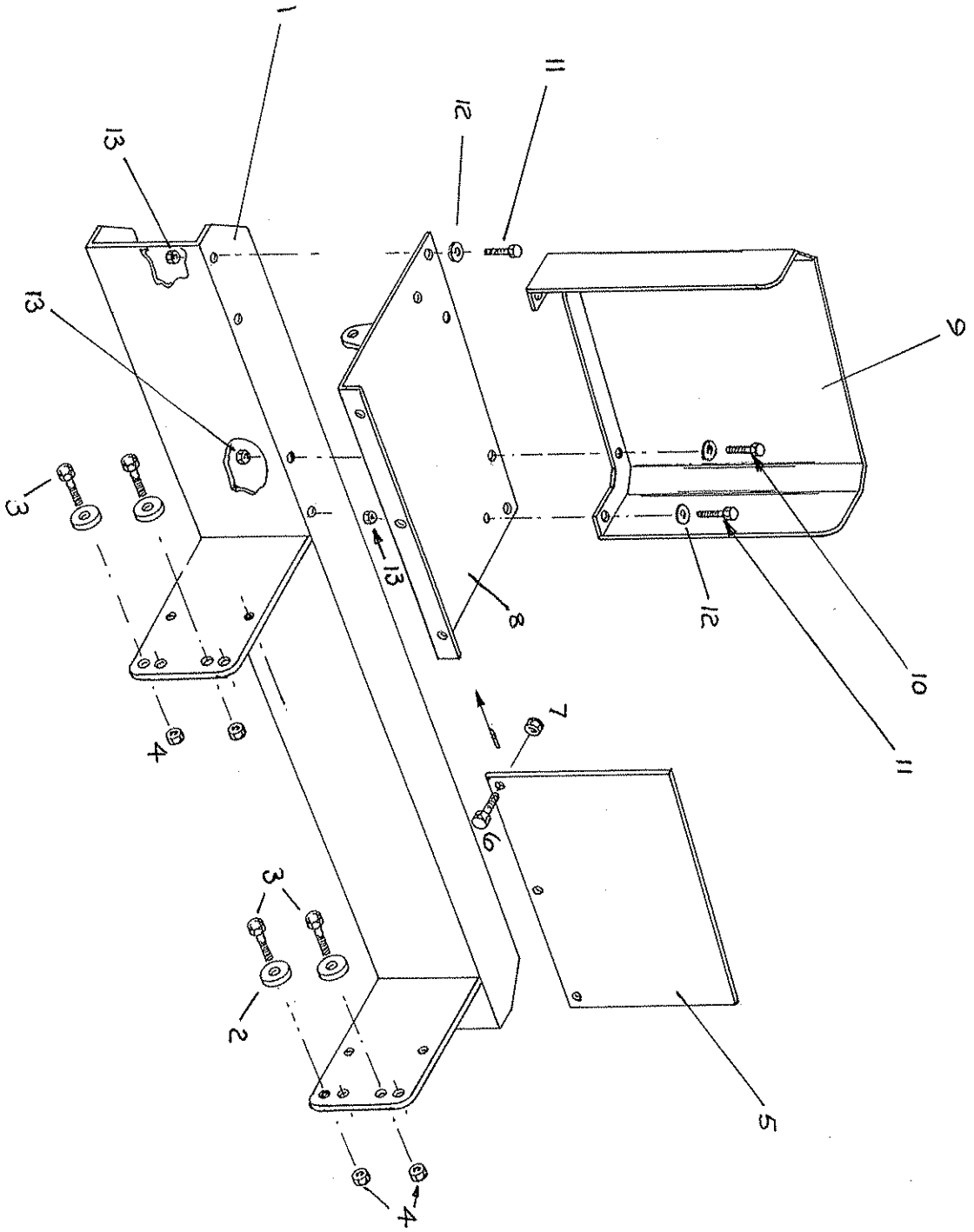
1
11
12
13
13
9
3
13
8
12
10
4
11
7
6
3
2
5
4

REAR CHANNEL, VALVE MTG. PLATE AND GUARD

ITEM	PART NO.	DESCRIPTION	QTY
1	194.007	Rear Channel	1
2	194.010	Special Washer	4
3	2733	Bolt M12 x 40 (8.8)	4
4	3082	Stiffnut M12 (Nyloc)	4
5	194.051	Valve mounting plate	1
6	2917	Setscrew M10 x 25	3
7	4421	Stiffnut M10 (Nyloc)	3
8	194.008	Mounting Plate	1
9	194.009	Rear Cover for Valves etc.	1
10	3110	Setscrew M8 x 30 (8.8)	2
11	2987	Setscrew M8 x 25 (8.8)	4
12	3111	Flatwasher M8	6
13	3182	Stiffnut M8 (Nyloc)	6

TWOSE

8177/sb/0299

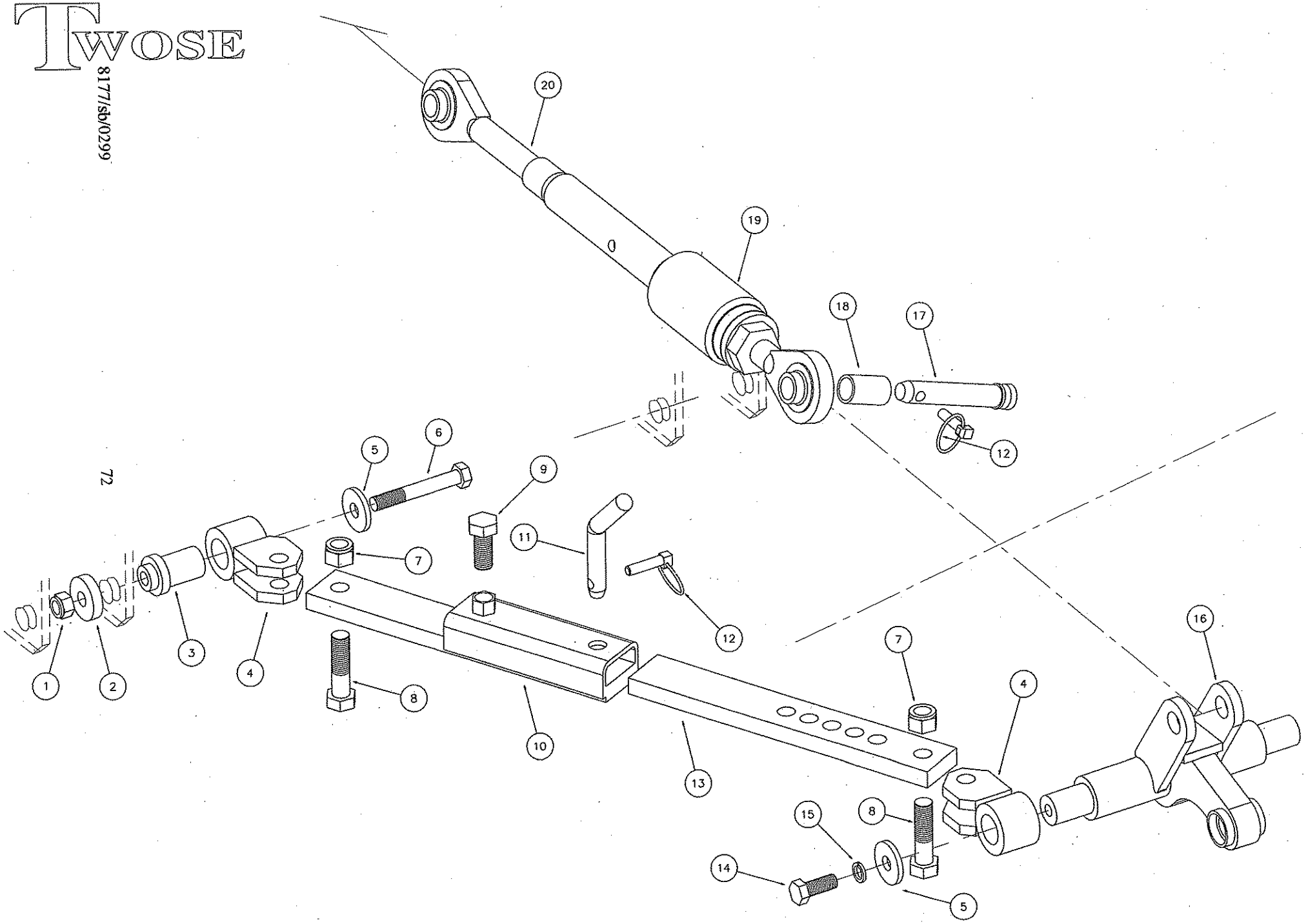

STABILISER PARTS

ITEM	PART NO.	DESCRIPTION	QTY
1	3747	Stiffnut M16 Nyloc	2
2	184.436	Washer M16 Special 50 Dia BDMS x 12	2
3	187.053A	Lift Pin Stabiliser 45 Dia BDMS x 69	2
4	184.430	Anchor Bracket	4
5	185.096	Washer M16 Special 50 Dia BDMS x 6	4
6	2914	Bolt M16 *110 (8.8)	2
7	3732	Stiffnut M20 Nyloc	4
8	2705	Bolt M20 * 75 (8.8)	4
9	3904	Setscrew M20 * 45 (8.8)	2
10	184.672	Slide Box	2
11	184.437	Pin 20 Dia BDMS x 160	2
12	0832	Pin Linch 7/16"	3
13	184.671	Slide Arm Inner 60x20MS x 440	2
14	3904	Setscrew M20 * 45 (8.8)	2
15	2730	Washer M16 Spring	2
16	184.435A	Top Link Coupler (Wide)	1
or	184.435B	Top Link Coupler (Narrow)	1
17	2584	Pin Linkage 1"	1
18	7956	Sleeve Top Link Cat 2-3	1
*	6956	Grease Nipple M6	1
19	186.162A	Sprung Top Link Assembly	1
20	7758.1	RH Threaded Top Link Eye	1
*	7758.4	Tommy Bar	1
*	7758.5	Locking Collar	1

* = Not illustrated

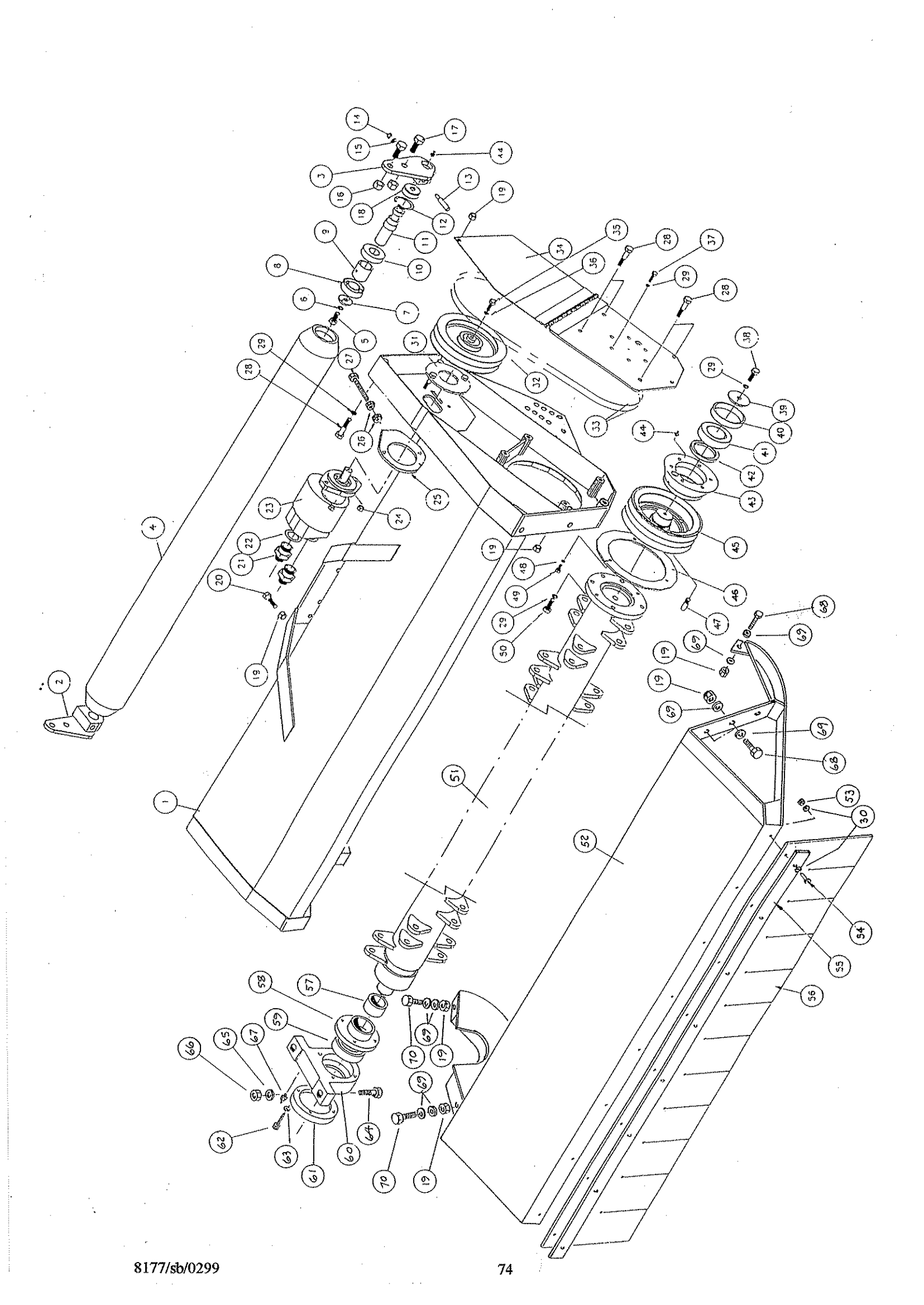

HEAD ASSEMBLY
1.2M AND 1.52M

ITEM	PART NO.	DESCRIPTION	QTY
1	184.615A	Head 1.2m Weld Assy	1
or	184.615B	Head 1.52m Weld Assy	1
2	184.622R	Bracket Roller RH	1
3	184.622L	Bracket Roller LH	1
4	184.621A	Roller Assy 1.2m	1
or	184.621B	Roller Assy 1.52m	1
5	2711	Setscrew M12 x 20 (8.8)	2
6	2729	Washer M12 Spring	2
7	174.006	Washer M12 Special	2
8	8029	Bearing	2
9	184.589	Spacer	2
10	7898	Bearing	2
11	184.588	Shaft Stub Roller	2
12	8030	Circlip	2
13	1840591	Cotter Pin Special ½"	2
14	3182	Stiffnut M8 Nyloc	2
15	3111	Washer M8 Form A	2
16	3747	Stiffnut M16 Nyloc	4
17	2901	Setscrew M16 x 35 (8.8)	4
18	184.689	Spacer 30id	2
19	3082	Stiffnut M12 Nyloc	14
20	2733	Bolt M12 x 40 (8.8)	8
21	0935	Adapter 3/4 BSP	2
22	0934	Seal 3/4"	2
23	8027	Motor Gear Type for H/T	1
24	4421	Stiffnut M10 Nyloc	2
25	184.625	Motor plate assembly	1
26	2799	Fullnut M10	2
27	8172	Setscrew M10 x 80 (8.8)	1
28	2986	Bolt M12 X 80 (8.8)	6
29	2729	Washer M12 Spring	11
30	3111	Washer M8 Form 'A' for 1.2m Head	32
or	3111	Washer M8 Form 'A' for 1.52m Head	40
31	184.463	Motor Fixing Ring	1

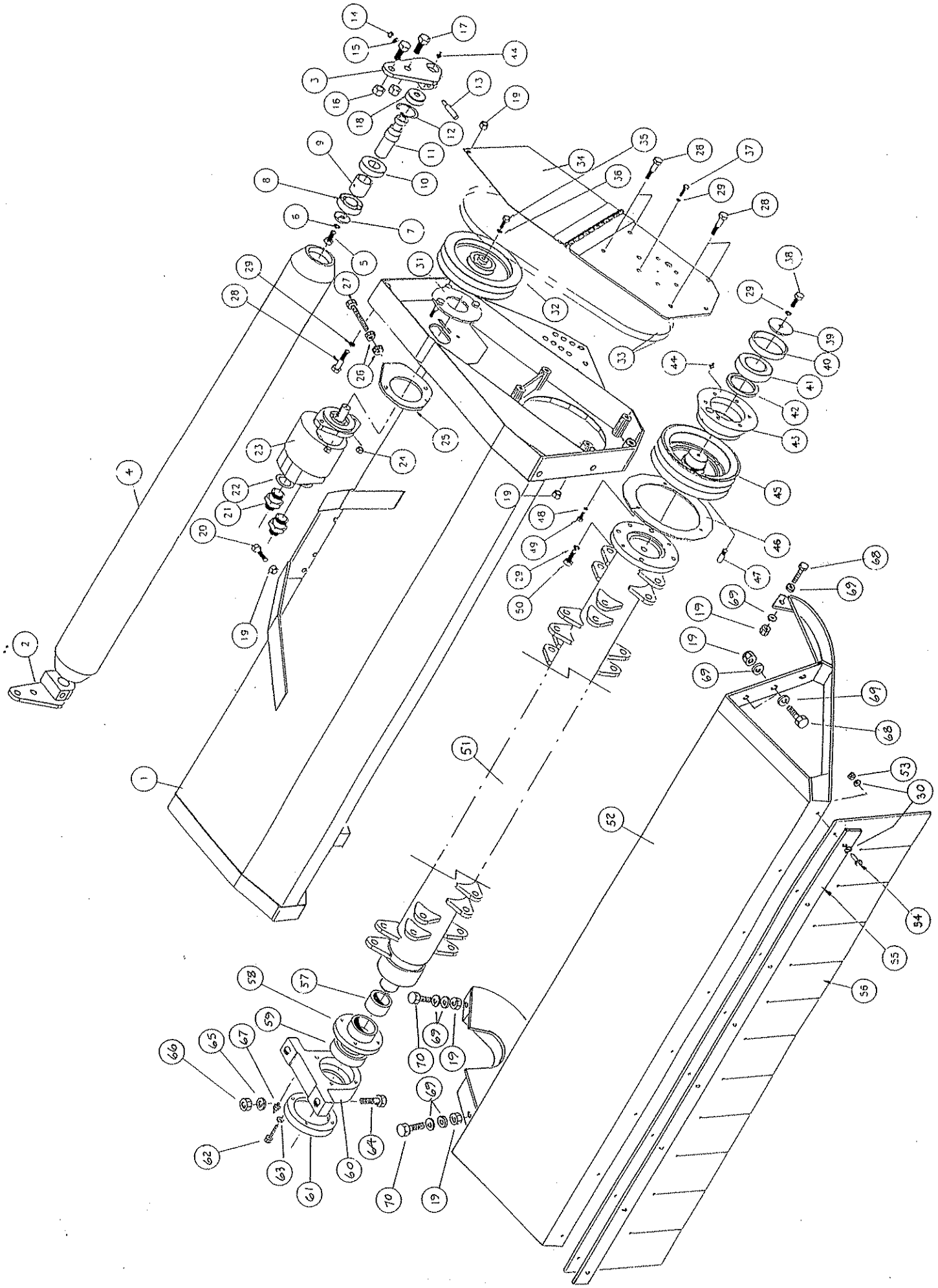

HEAD ASSEMBLY
(1.2M AND 1.52M)
CONTINUED

ITEM	PART NO.	DESCRIPTION	QTY
32	184.445	Pulley Motor 242 PCD	1
33	7692	Belt Vee	2
34	184.623	Drive Plate	1
35	7491	Bolt 3/8" UNF x 1"	1
36	0872	Washer Imp 3/8 Spring	1
37	2711	Setscrew M12 x 20 (8.8)	6
38	2950	Setscrew M12 x 30 (8.8)	4
39	184.461	Washer M12 Special	1
40	184.464	Spacer for Bearing	1
41	7840	Bearing	1
42	7790	Oil Seal	1
43	184.448	Bearing Housing	1
44	2923	G/Nipple M10 x 1.5	4
45	184.446	Pulley Rotor 200 PCD	1
46	184.636	Grass Ring	1
47	184.489	Dowel Pin	1
48	3001	Washer M8 Spring	3
49	2793	Setscrew M8 x 20 (8.8)	3
50	7855	Setscrew M12 x 35 FINE	4
51	184.618/9 A/B	Rotor	1
	(see following pages for specific types)		
52	184.616A	Nose Weld Assy 1.2m	1
or	184.616B	Nose Weld Assy 1.52m	1
53	3182	Stiffnut M8 (for 1.2m head)	16
or	3182	Stiffnut M8 for (1.52m head)	20
54	2987	Setscrew M8 x 25 (8.8) (for 1.2m Head)	16
or	2987	Setscrew M8 x 25 (8.8) (for 1.52m Head)	20
55	184.617A	Clamp Strip for 1.2m Head	2
or	184.617B	Clamp Strip for 1.52m Head	2
56	1840476F	Curtain for 1.2m Head	2
or	1840581	Curtain for 1.52m Head	2

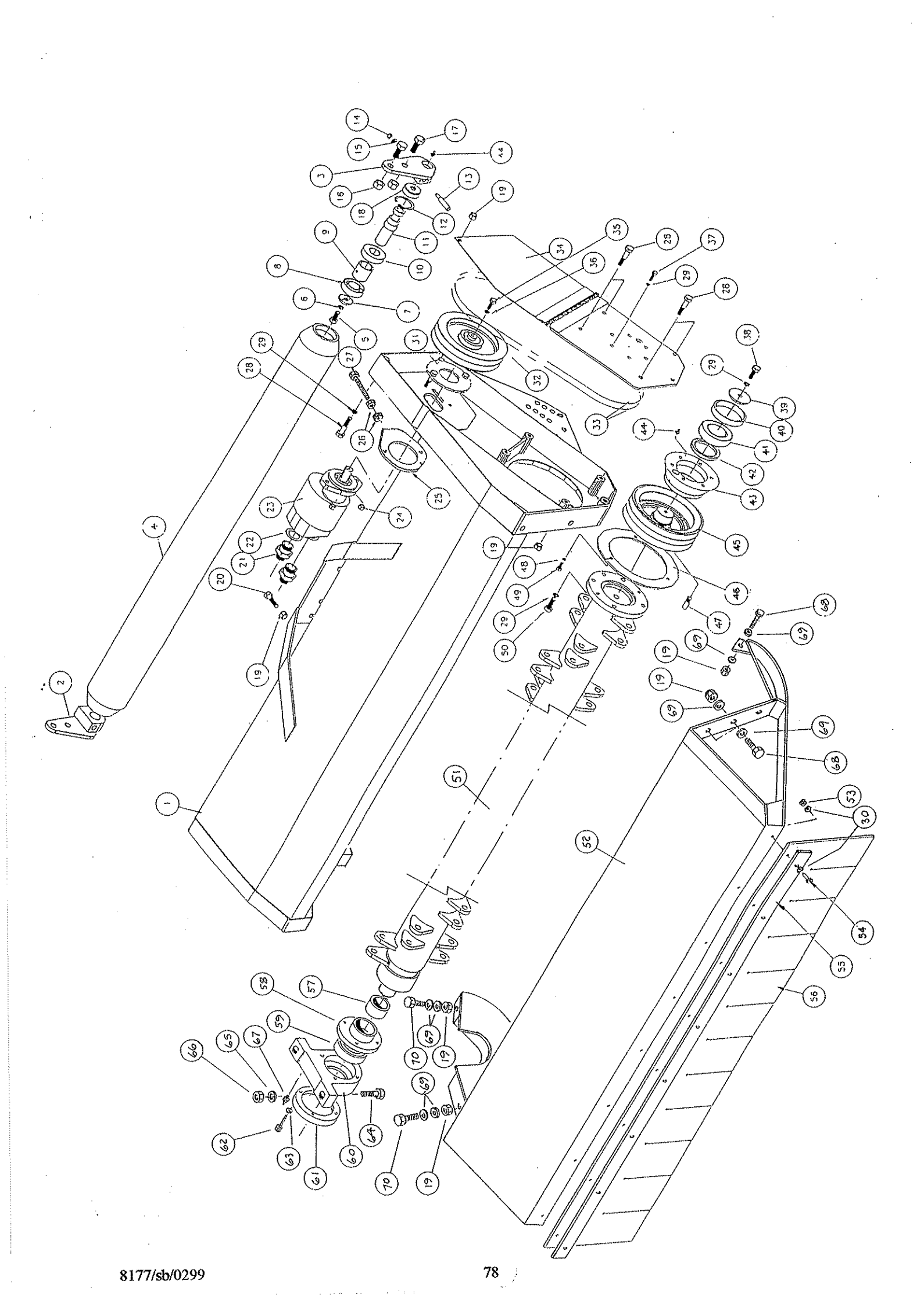

HEAD ASSEMBLY (1.2M AND 1.52M) CONTINUED

ITEM	PART NO.	DESCRIPTION	QTY
57	192.046	Spacer for bearing	1
58	192.026	Shield for Bearing	1
59	7941	Bearing	1
60	192.024	Housing for bearing	1
61	192.025	Cap for Bearing	1
62	6985	Setscrew-Socket M6 x 45 Cap	4
63	2731	Washer Spring M6	4
64	2878	Bolt M16 x 55 (8.8)	2
65	3747	Washer M16 Form 'A'	4
66	2867	Stiffnut M16	2
67	6956	Grease Nipple M6	1
68	2950	Setscrew M12 x 30 (8.8)	3
69	3192	Washer M12 Form 'C'	10
70	2962	Setscrew M12 x 35	2

PARTS LIST FOR DS HEAD

Below are shown 3 types of rotor, along with the flail options available to fit each. Part numbers are given for rotors complete with flails and end bearings and also for the flails, spacers, nuts and bolts individually.
Note - though it is possible to supply rotors balanced without flails we do not recommend this.

184.618 Type Rotor -

Back-to-back flails on shackles -

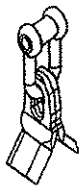

184.618A(U)	Rotor 1.2m c/w Flails and end brg	1	
184.618B(W)	Rotor 1.52m c/w Flails and end brg		1
192.053	Spacer 12.5id	30	36
1920071	Flail for shackle	60	72
8095	Stiffnut M12 Nyloc Fine	30	36
1920069	Bolt M12 x 87 (10.9)	30	36
1920052	Shackle	30	36

Boot flails on shackles -

184.618A(V)	Rotor 1.2m c/w Flails and end brg	1	
184.618B(X)	Rotor 1.52m c/w Flails and end brg		1
192.053	Spacer 12.5id	30	36
1840605	Flail for shackle	30	36
8095	Stiffnut M12 Nyloc Fine	30	36
1920069	Bolt M12 x 87 (10.9)	30	36
1920052	Shackle	30	36

Both the above flail options can be fitted to the same rotor. This rotor is distinguishable from others in that the distance between lugs (inside to inside) is 53mm and the holes are for an M12 bolt.

184.619 Type Rotor -

Lump flails -

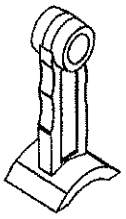

184.619A(C)	Rotor 1.2m c/w Flails and end brg	1	
184.619B(J)	Rotor 1.52m c/w Flails and end brg		1
184.106	Spacer 16.5id	24	30
1840093C	Flail Heavy Duty	24	30
7942	Stiffnut M16 Nyloc Fine	24	30
7943	Bolt M16 x 80 (10.9)	24	30

Heavy Duty Grass Flails -

184.619A(D)	Rotor 1.2m c/w Flails and end brg	1	
184.619B(K)	Rotor 1.52m c/w Flails and end brg		1
184.106	Spacer 16.5id	24	30
1840330	Flail Heavy Duty Grass	24	30
7942	Stiffnut M16 Nyloc Fine	24	30
7943	Bolt M16 x 80 (10.9)	24	30

PARTS LIST FOR DS HEAD CONTINUED

Rigid Back-to-Back Flails -

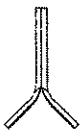

184.619A(A)	Rotor 1.2m c/w Flails and end brg	1	
184.619B(H)	Rotor 1.52m c/w Flails and end brg		1
184.500	Spacer 16.5id	48	60
1840497	Flail back to back	48	60
7942	Stiffnut M16 Nyloc Fine	24	30
7943	Bolt M16 x 80 (10.9)	24	30

All the above 3 flail options can be fitted to the same rotor. This rotor is distinguishable from others in that the distance between lugs (inside to inside) is 40mm and the holes are for an M16 bolt.

184.620 Type Rotor -

Rollicoupe flails

184.620(G)	Rotor 1.2m c/w Flails and end brg	1
184.571	Spacer 16.5id	20
1840572	Flail Rollicoupe	20
3747	Stiffnut M16 Nyloc	20
8092U	Bolt M16 x 110 (10.9)	20

This is a highly specialised rotor which accepts only the type of flail listed. The rotor's appearance is totally different from that indicated on pages 74, 76 and 78; as the structure resembles a large cylinder into which the flails can retract.

(For balanced 'bare' rotors the part numbers are as the 'flailed-up' rotor but with 'B' replacing the letter in the brackets. Example: balanced bare 1.2m rotor suitable for HD, HDG and rigid back-to-back flails = 184.619A(B).)

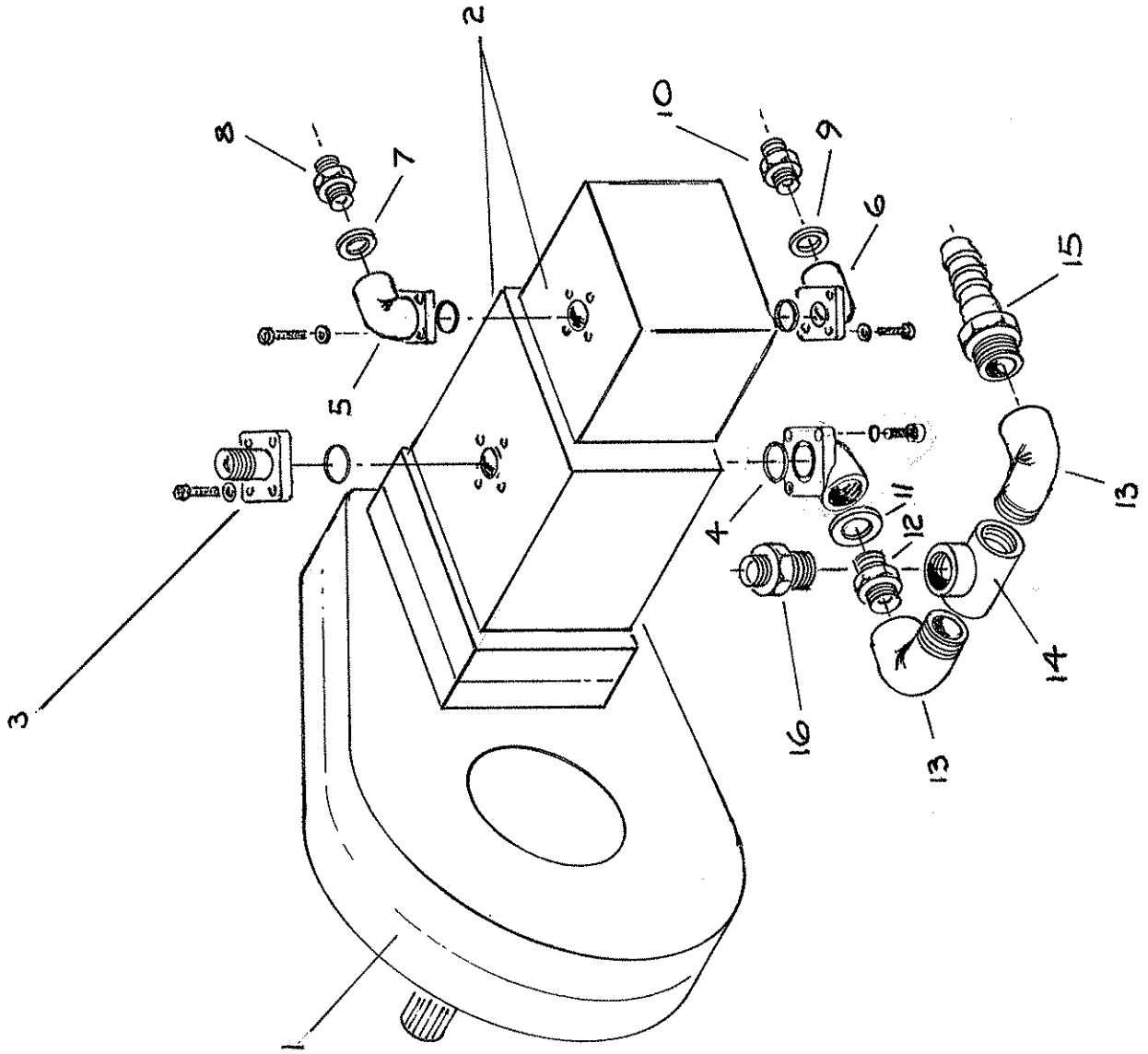
1
2
3
4
5
6
7
8
9
10
11
12
13
13
14
15
16

PTO Gearbox, Pump and Fittings

ITEM	PART NO.	DESCRIPTION	QTY
1	194.056	P.T.O Gearbox	1
*	8159	'O' Ring	1
2	7939 (41C.0.0)	Pump set single (R machines)	1
or	7939 (41C,8,0)	Pump set dual (RI/RIE machines)	or 1
or	7939 (41C,16,0)	Pump set dual (RIEP machines)	or 1
3	7939-E06S	Elbow 3/4" IPE6 straight + 'O' ring + 5/16" Screws	1
4	7939-E08	Elbow 1" IPE8 c/w 'O' ring + M10 screws	1
5	7939-E04	Elbow 1/2" IPE4 c/w 'O' ring + 5/16" screws	1 or 0
6	7939-E06	Elbow 3/4" IPE6 c/w 'O' ring + 5/16" screws	1 or 0
7	0909	Seal 1/2"	1 or 0
8	1826	Adaptor 1/2" x 1/2" BSP	1 or 0
9	0934	Seal 3/4"	1 or 0
10	0935	Adaptor 3/4 x 3/4 BSP	1 or 0
11	1934	Seal 1"	1
12	7559	Adaptor 1" x 1 1/2" BSPT	1
13	8002	Elbow 1 1/2" M/F BSPT	2
14	8001	Tee 1 1/2 F/F/F	1
15	7999	Hose Tail 1 1/2" BSP (Male)	1
16	8010	Adaptor 3/4" BSP x 1 1/2" BSPT	1

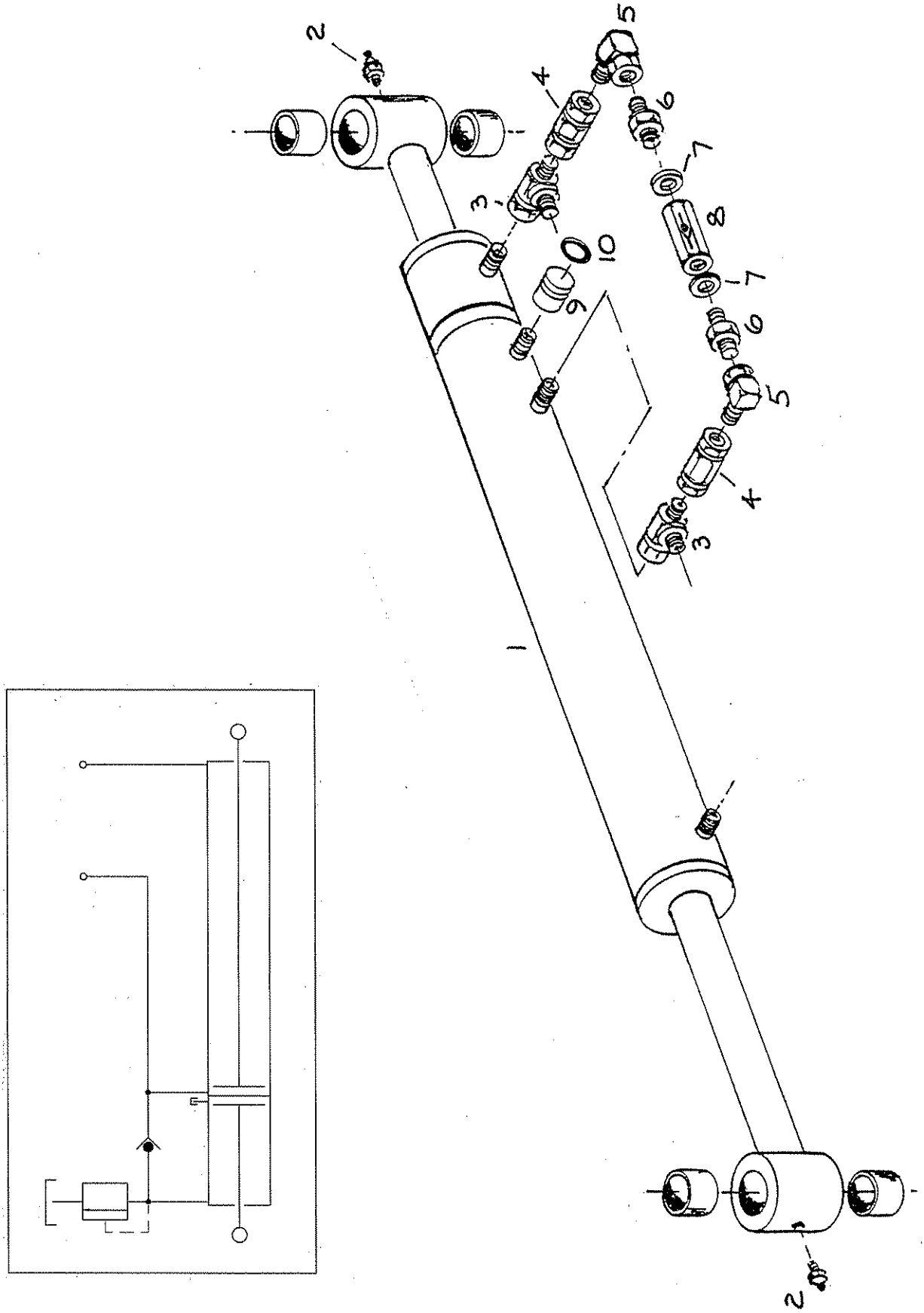
1
2
2
3
3
4
4
5
5
6
6
7
7
8
9
10

BREAKBACK RAM AND FITTINGS

ITEM	PART NO.	DESCRIPTION	QTY
1	1940047	Breakback Ram	1
2	2923	Grease Nipple M10 straight	2
3	7181	Tee 1/4" BSP M-M-F	2
4	4032	Adaptor 1/4" BSP F-FLN	2
5	6948	Adaptor 1/4" BSP M-FLN 91	2
6	1823	Adaptor 1/4" BSP	2
7	1181	Seal 1/4" BSP	2
8	6986	Check Valve FPR 3/8 o.5b	1
9	154.021	Breather	1
10	5222	'O' Ring for breather	1
*	1840047.1	Complete seal set for 1940047	
*	1940047.2	Rod complete (LONG) for 1940047	
*	1940047.3	Rod complete (SHORT) for 1940047	
*	1940047.4	Gland nut for 1940047	
*	1940047.5	Set of bushes for 1940047	

* = Not illustrated

Note - On some models the check valve (8) has been moved onto the valve plate, however its relative position remains as the schematic diagram on page 84.

520 S REP

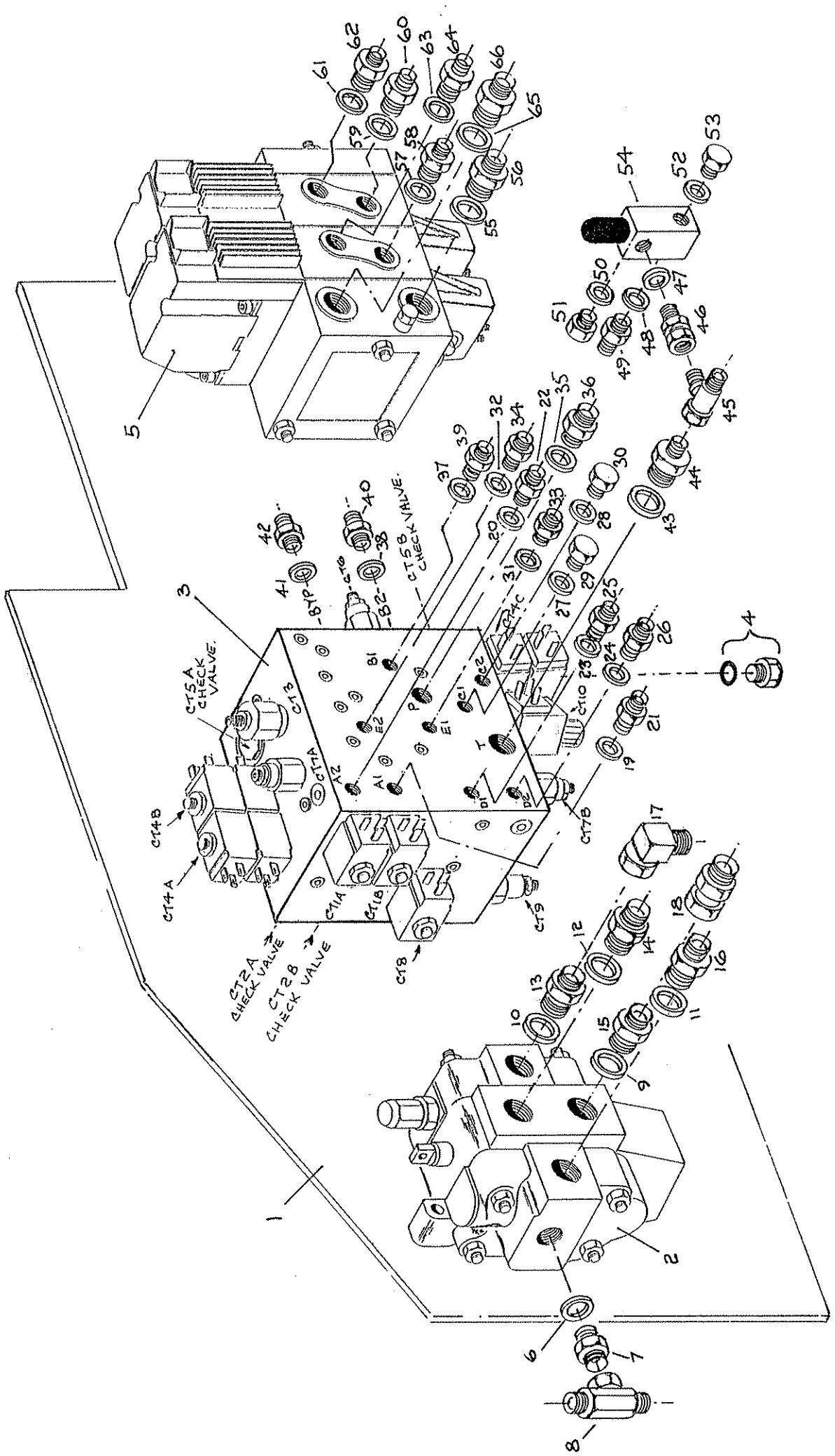
CT5A CHECK VALVE
CT5B CHECK VALVE
CT2A CHECK VALVE
CT2B CHECK VALVE
CT4A
CT4B
CT7A
CT7B
CT8
CT9
CT10
CT11A
CT11B
CT13
A1
A2
B1
B2
C1
C2
D1
D2
E1
E2
P
T

520S-RIEP MACHINES, VALVE PLATE, VALVES, VALVE MOUNTING BOLTS AND HYDRAULIC FITTINGS

ITEM	PART NO.	DESCRIPTION	QTY
1.		Valve mounting plate	1
2	7542 R225	Valve block V3, R225 BT6 MLX T6S40 225 Bar	1
*	3183	Bolt M8 x 45 (8.8)	3
*	3111	Washer M8, Form 'A'	3
*	3182	S. Nut M8 Nyloc	3
3	8123	Valve-Multi block DXP18006-01	1
4	8123.1	Cartridge blanking for telescopic cavities	2
*	2793	Setscrew M8 x 20 (8.8)	4
*	3001	S.Washer M8	4
*	3111	Flatwasher M8 (Form 'A')	4
5	7577	Valve Proportional PVG32, 2 slice code 15/N2110 115 bar	1
*	2793	Setscrew M8 x 20 8.8	4
*	3001	Washer Spring M8	4
*	3111	Flatwasher M8 Form 'A'	4
6	0909	Seal 1/2"	1
7	1826	Adaptor 1/2" x 1/2" BSP	1
8	4933	Tee, 1/2 M/M/FM	1
9	0934	Seal 3/4"	1
10	0934	Seal 3/4"	1
11	0934	Seal 3/4"	1
12	0934	Seal 3/4"	1
13	0935	Adapator 3/4" BSP	1
14	0935	Adapator 3/4" BSP	1
15	0935	Adapator 3/4" BSP	1
16	1836	Adaptor 3/4" BSP x 1" BSP	1
17	3342	Adaptor 3/4" BSP M-F 91 block	1
18	7905	Adaptor 3/4" BSP M-FLN	1
19	1181	Seal 1/4"	1
20	1181	Seal 1/4"	1
21	1823	Adaptor 1/4" BSP	1
22	1823	Adaptor 1/4" BSP	1
23	1181	Seal 1/4"	1
24	1181	Seal 1/4"	1
25	1823	Adaptor 1/4" BSP	1
26	1823	Adaptor 1/4" BSP	1
27	1181	Seal 1/4"	1

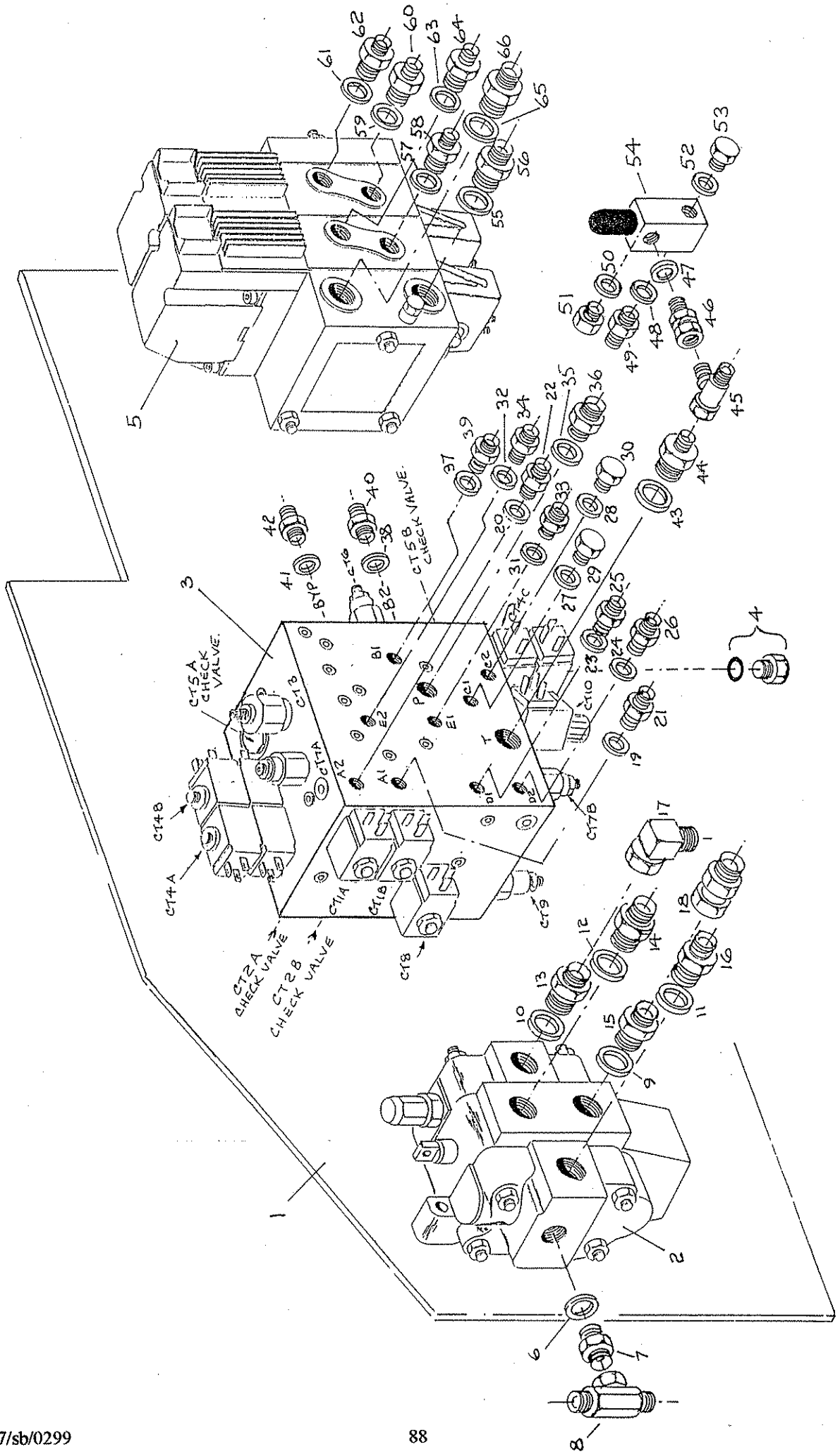
CT5A CHECK VALVE
CT5B CHECK VALVE
CT2A CHECK VALVE
CT2B CHECK VALVE
CT4A
CT4B
CT7A
CT7B
CT8
CT9
CT10
CT11A
CT11B
CT13
CT16
BYP
P
T
A1
A2
B1
B2
C1
C2
D1
D2
E1
E2

520S-RIEP MACHINES, VALVE PLATE, VALVES, VALVE MOUNTING BOLTS AND HYDRAULIC FITTINGS CONTINUED

ITEM	PART NO.	DESCRIPTION	QTY
28	1181	Seal 1/4"	1
29	3260	Plug 1/4" BSP	1
30	3260	Plug 1/4" BSP	1
31	1181	Seal 1/4"	1
32	1181	Seal 1/4"	1
33	1823	Adaptor 1/4" BSP	1
34	1823	Adaptor 1/4" BSP	1
35	0670	Seal 3/8"	1
36	0914	Adaptor 3/8" BSP x 1/2" BSP	1
37	1181	Seal 1/4"	1
38	1181	Seal 1/4"	1
39	1823	Adaptor 1/4" BSP	1
40	1823	Adaptor 1/4" BSP	1
41	0909	Seal 1/2" BSP	1
42	1826	Adaptor 1/2" BSP x 1/2" BSP	1
43	0909	Seal 1/2" BSP	1
44	1826	Adaptor 1/2" BSP x 1/2" BSP	1
45	5002	Tee 1/2" BSP FM-M-M	1
46	7832	Adaptor 1/2" FM x 1/4" M	1
47	1181	Seal 1/4"	1
48	1181	Seal 1/4"	1
49	1823	Adaptor 1/4" BSP	1
50	1181	Seal 1/4"	1
51	3260	Plug 1/4" BSP	1
52	1181	Seal 1/4"	1
53	3260	Plug 1/4" BSP	1
54	7484	Relief Valve	1
55	0934	Seal 3/4"	1
56	1834	Adaptor 1/2 x 3/4"	1
57	0909	Seal 1/2"	1
58	1825	Adaptor 1/4" x 1/2"	1
59	0909	Seal 1/2"	1
60	1825	Adaptor 1/4" x 1/2"	1
61	0909	Seal 1/2"	1
62	1825	Adaptor 1/4 x 1/2"	1
63	0909	Seal 1/2"	1
64	1825	Adaptor 1/4" x 1/2"	1
65	0934	Seal 3/4"	1
66	1834	Adaptor 1/2" x 3/4"	1

520S RI

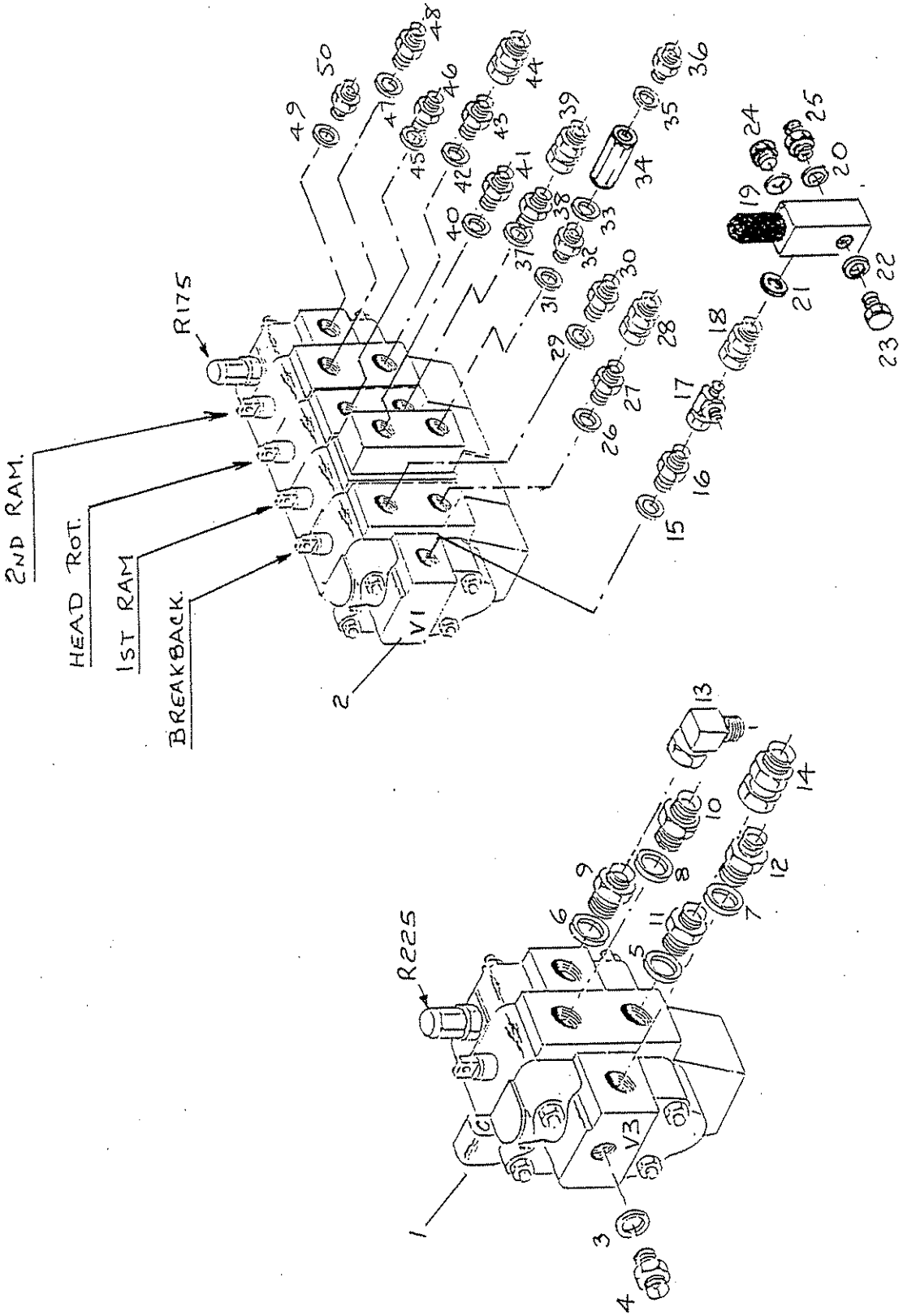

520S-RI MACHINES, VALVE PLATE, VALVES, AND HYDRAULIC FITTINGS

ITEM	PART NO.	DESCRIPTION	QTY
*		Valve Plate	1
1	2745 R225	Valve block V3, R225 BT6 MLX T6S40	1
*	7542.1	Relief Valve (spares only) set @ 225 Bar	
*	3183	Bolt M8 x 45 (8.8)	3
*	3111	Washer M8 (Form 'A')	3
*	3182	Stiffnut M8 (Nyloc)	3
2	7698	Valve Block V1	1
*	2793	Setscrew M8 x 20 (8.8)	4
*	3111	Washer M8 Form 'A'	4
*	3001	Washer M8 Spring	4
*	7698.4	Relief Valve (Spares only) set @ 175bar	
3	0909	Seal 1/2"	1
4	1826	Adaptor 1/2" x 1/2" BSP	1
5	0934	Seal 3/4"	1
6	0934	Seal 3/4"	1
7	0934	Seal 3/4"	1
8	0934	Seal 3/4"	1
9	0935	Adaptor 3/4" BSP	1
10	0935	Adaptor 3/4" BSP	1
11	0935	Adaptor 3/4" BSP	1
12	1836	Adaptor 3/4" BSP x 1" BSP	1
13	3342	Adaptor 3/4" BSP M-F 91 Block	1
14	7905	Adaptor 3/4" BSP M-FLN	1
15	0909	Seal 3/8"	1
16	0914	Adaptor 3/8" x 1/2"	1
17	5002	Tee 1/2" M-F-M	1
18	7832	Adpator 1/2" BSP F/M x 1/4" M	1
19	1181	Seal 1/4"	1
20	1181	Seal 1/4"	1
21	1181	Seal 1/4"	1
22	1181	Seal 1/4"	1
23	3260	Plug 1/4" BSP	1
24	3260	Plug 1/4" BSP	1
25	1823	Adaptor 1/4" x 1/4"	1

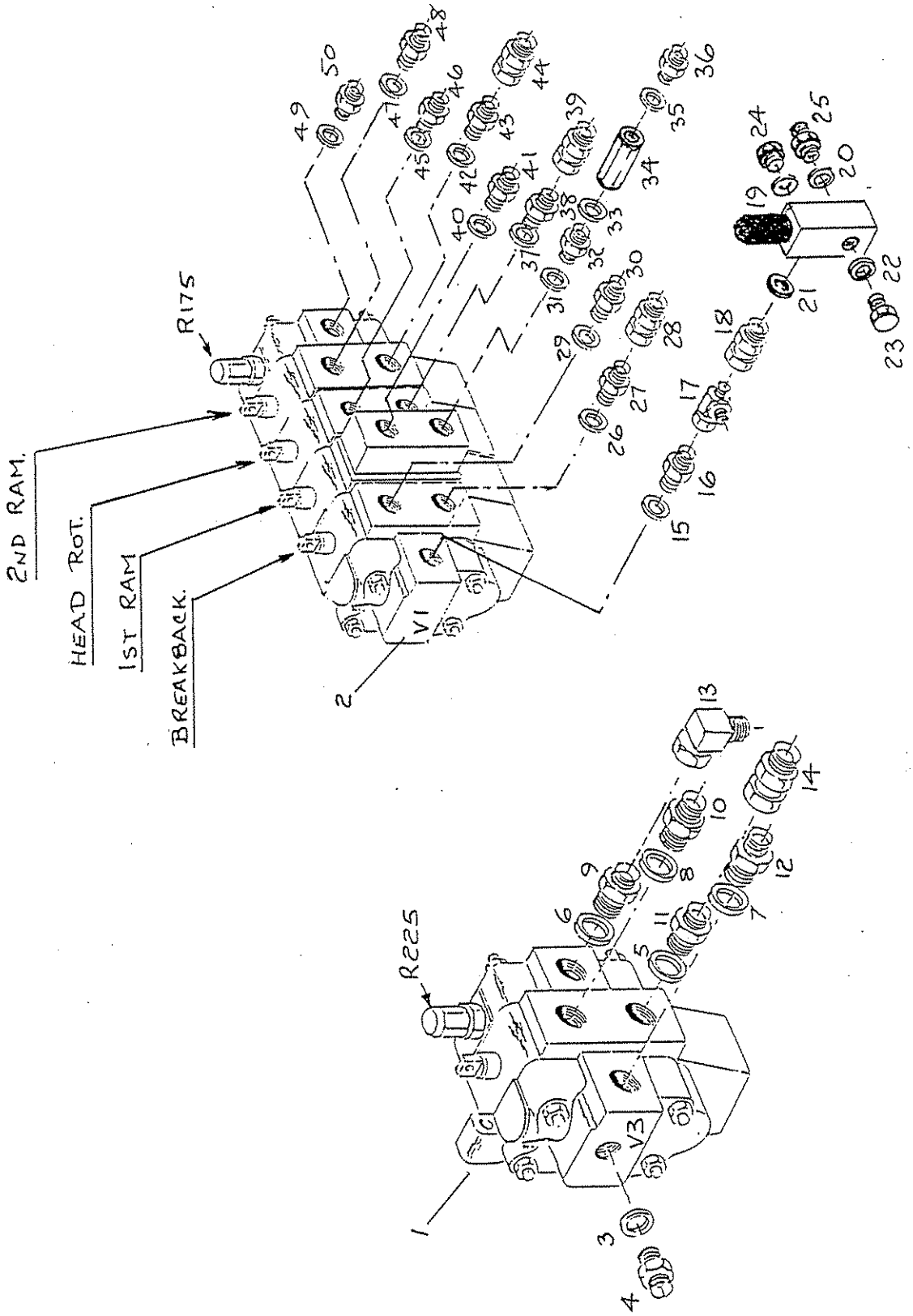
2ND RAM.
HEAD ROT.
1ST RAM
BREAKBACK.
R175
V1
R225
V3

520S-RI MACHINES, VALVE PLATE, VALVES AND HYDRAULIC FITTINGS CONTINUED

ITEM	PART NO.	DESCRIPTION	QTY
26	0909	Seal 3/8"	1
27	1180	Adaptor 1/4" x 3/8"	1
28	7305	Adaptor 1/4" BSP M/FM	1
29	0909	Seal 3/8"	1
30	1180	Adaptor 1/4" BSP x 3/8"	1
31	0909	Seal 3/8"	1
32	1180	Adaptor 1/4" x 3/8"	1
33	1181	Seal 1/4"	1
34	7813	Restrictor (1-way) 1.8 (0.5 bar)	1
35	1181	Seal 1/4"	1
36	1823	Adaptor 1/4" x 1/4"	1
37	0909	Seal 3/8"	1
38	1180	Adaptor 1/4" x 3/8"	1
39	7305	Adaptor 1/4" BSP M/FM	1
40	0909	Seal 3/8"	1
43	1180	Adaptor 1/4" x 3/8"	1
44	7305	Adaptor 1/4" BSP M/FM	1
45	0909	Seal 3/8"	1
46	1180	Adaptor 1/4" x 3/8"	1
47	0909	Seal 3/8"	1
48	1180	Adaptor 1/4" x 3/8"	1
49	0909	Seal 3/8"	1
50	0914	Adaptor 3/8" x 1/2"	1

5805 RI

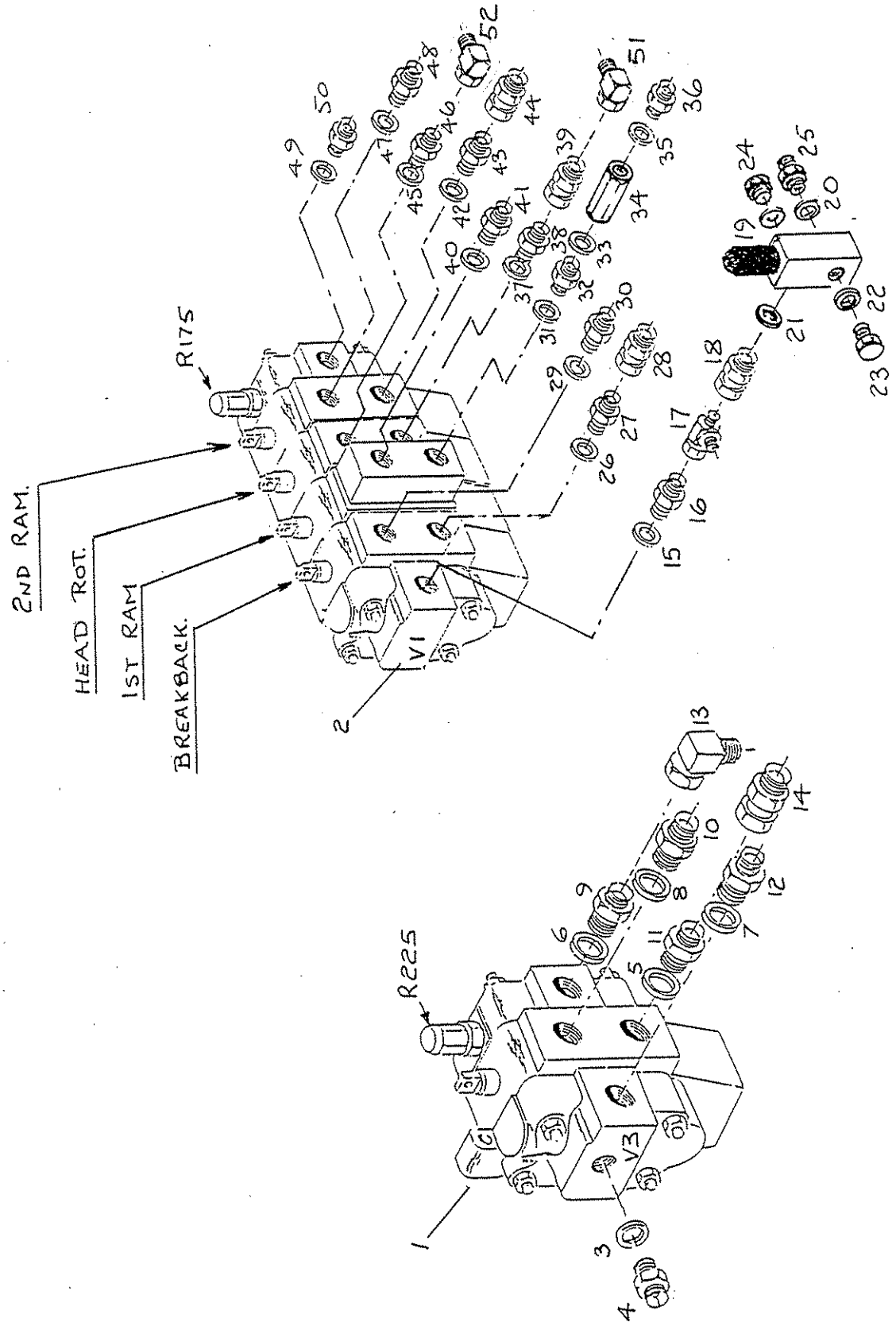

580S-RI MACHINES, VALVE PLATE, VALVES, AND HYDRAULIC FITTINGS

ITEM	PART NO.	DESCRIPTION	QTY
*		Valve Plate	1
1	2745 R225	Valve block V3, R225 BT6 MLX T6S40	1
*	7542.1	Relief Valve (spares only) set @ 225 Bar	
*	3183	Bolt M8 x 45 (8.8)	3
*	3111	Washer M8 (Form 'A')	3
*	3182	Stiffnut M8 (Nyloc)	3
2	7698	Valve Block V1	1
*	2793	Setscrew M8 x 20 (8.8)	4
*	3111	Washer M8 Form 'A'	4
*	3001	Washer M8 Spring	4
*	7698.4	Relief Valve (Spares only) set @ 175bar	
3	0909	Seal 1/2"	1
4	1826	Adaptor 1/2" x 1/2" BSP	1
5	0934	Seal 3/4"	1
6	0934	Seal 3/4"	1
7	0934	Seal 3/4"	1
8	0934	Seal 3/4"	1
9	0935	Adaptor 3/4" BSP	1
10	0935	Adaptor 3/4" BSP	1
11	0935	Adaptor 3/4" BSP	1
12	1836	Adaptor 3/4" BSP x 1" BSP	1
13	3342	Adaptor 3/4" BSP M-F 91 Block	1
14	7905	Adaptor 3/4" BSP M-FLN	1
15	0909	Seal 3/8"	1
16	0914	Adaptor 3/8" x 1/2"	1
17	5002	Tee 1/2" M-F-M	1
18	7832	Adpator 1/2" BSP F/M x 1/4" M	1
19	1181	Seal 1/4"	1
20	1181	Seal 1/4"	1
21	1181	Seal 1/4"	1
22	1181	Seal 1/4"	1
23	3260	Plug 1/4" BSP	1
24	3260	Plug 1/4" BSP	1
25	1823	Adaptor 1/4" x 1/4"	1

5805 R7.

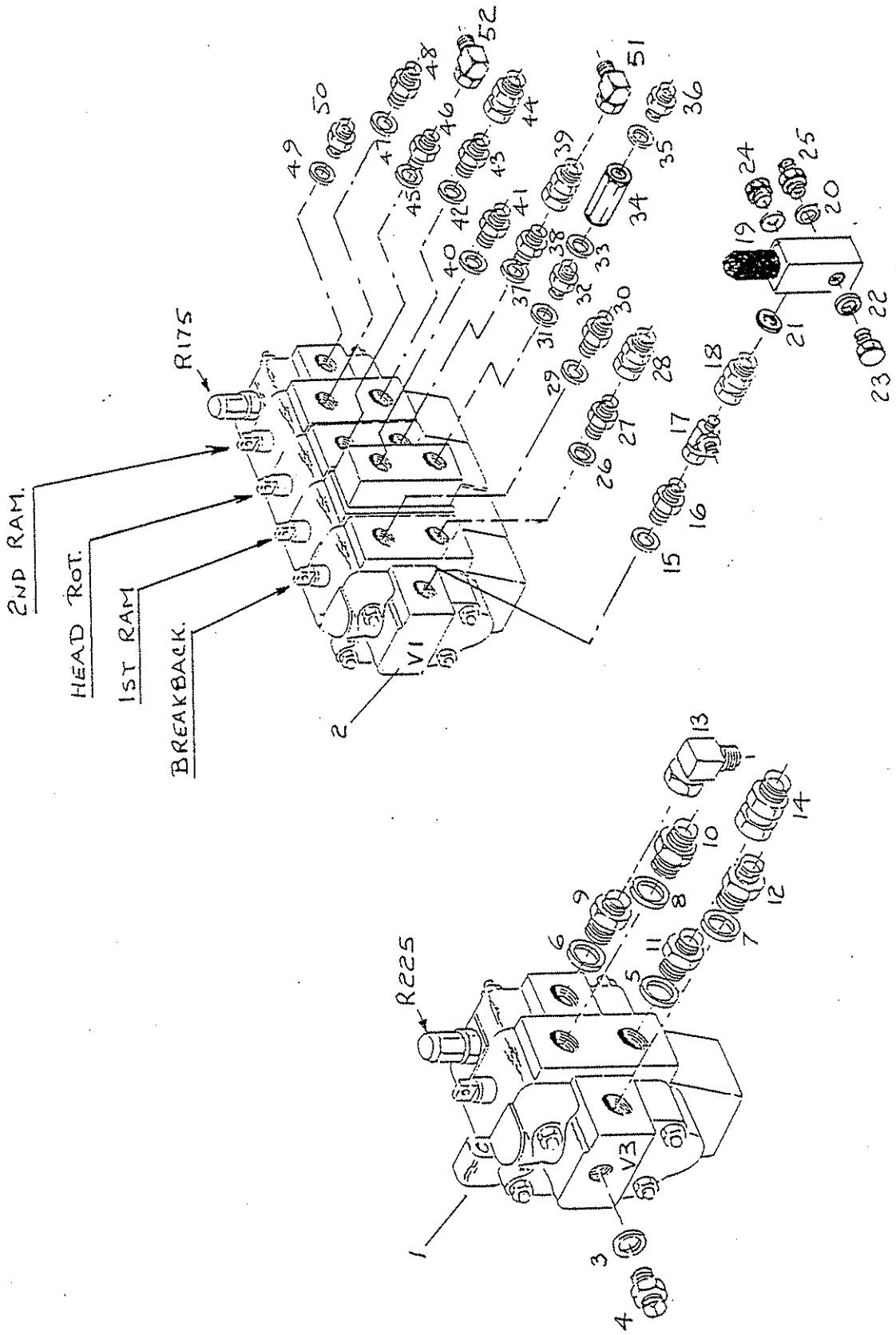

580S-RI MACHINES, VALVE PLATE, VALVES AND HYDRAULIC FITTINGS CONTINUED

ITEM	PART NO.	DESCRIPTION	QTY
26	0909	Seal 3/8"	1
27	1180	Adaptor 1/4" x 3/8"	1
28	7305	Adaptor 1/4" BSP M/FM	1
29	0909	Seal 3/8"	1
30	1180	Adaptor 1/4" BSP x 3/8"	1
31	0909	Seal 3/8"	1
32	1180	Adaptor 1/4" x 3/8"	1
33	1181	Seal 1/4"	1
34	7813	Restrictor (1-way) 1.8 (0.5 bar)	1
35	1181	Seal 1/4"	1
36	1823	Adaptor 1/4" x 1/4"	1
37	0909	Seal 3/8"	1
38	1180	Adaptor 1/4" x 3/8"	1
39	7305	Adaptor 1/4" BSP M/FM	1
40	0909	Seal 3/8"	1
43	1180	Adaptor 1/4" x 3/8"	1
44	7305	Adaptor 1/4" BSP M/FM	1
45	0909	Seal 3/8"	1
46	1180	Adaptor 1/4" x 3/8"	1
47	0909	Seal 3/8"	1
48	1180	Adaptor 1/4" x 3/8"	1
49	0909	Seal 3/8"	1
50	0914	Adaptor 3/8" x 1/2"	1
51	6948	Adaptor 1/4" BSP M/FLN 91	1
52	6948	Adaptor 1/4" BSP M/FLN 91	1

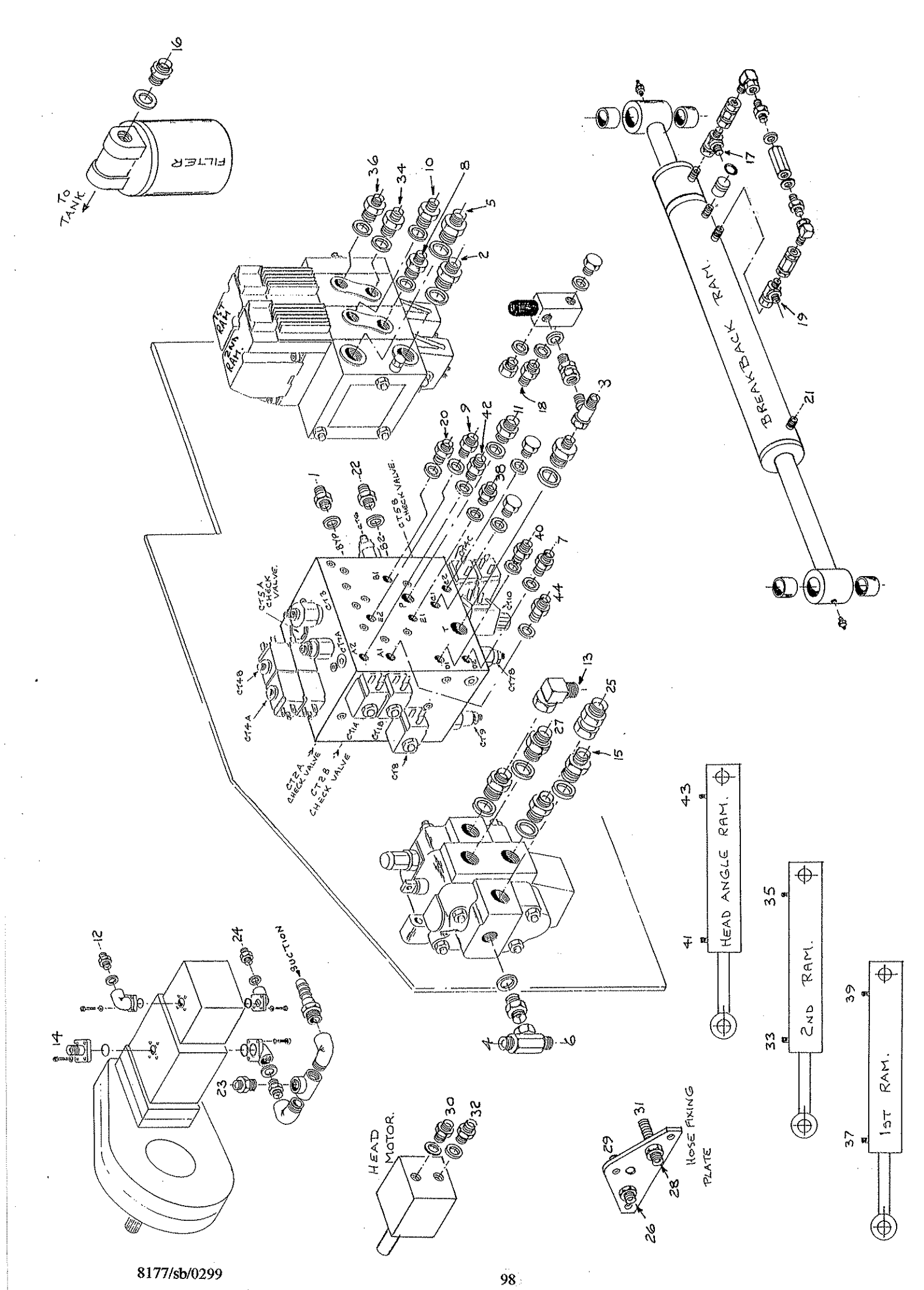
TO TANK
FILTER
1ST RAM
2ND RAM
BREAKBACK RAM
CT5A CHECK VALVE
CT5B CHECK VALVE
CT2A CHECK VALVE
CT2B CHECK VALVE
BYP
SUCTION
HEAD MOTOR
HOSE FIXING PLATE
HEAD ANGLE RAM
2ND RAM
1ST RAM

(520S RIE) HEDGETRIMMER
- LEFT HAND MACHINE
- HYPRO V3 MOTORSPOOL

HOSE CONNECTION POSITIONS AND HOSE DESCRIPTIONS

1-2	Integrated block 'BYP' port to Danfoss Pressure
004.749	1/2" hose 90 x 90 x 200 @ 110°
3-4	Integrated block to Motor Spool block ('Ton' Int block)
004.750	1/2" hose 90 x 90 x 500 @ 350°
5-6	Danfoss to Motor Spool block
004.751	1/2" hose 90 x 90 x 490 @ 270°
7-34	Integrated block 'D2' to Danfoss 'Bottom'
004.752	1/4" hose 90 x 90 x 380 @ 330°
9-36	Integrated block 'E2' to Danfoss 'Top'
004.753	1/4" hose 90 x 90 x 470 @ 330°
11-12	2nd Pump pressure to Integrated block 'P'
004.754	1/2" hose 90 x ST x 680
13-14	1st pump pressure to Motor Spool pressure
004.755	3/4" hose 90 x 90 x 390 @ 180°
15-16	Return from Motor Spool to Filter
004.756	1" hose 90 x 90 x 680 @ 340°
17-18	B.Back '2nd cyl.' to Relief Cartridge
004.757	1/4" hose 90 x 90 x 670 @ 90°
19-20	B-Back 'Main eye' (Anchor end) to Integrated block 'B1'
004.758	1/4" hose 90 x 90 x 500 @ 200°
21-22	B-Back 'Main Cyl.' (Rod end) to Integrated block 'B2'
004.759	1/4" hose 90 x 90 x 960 @ 250°
23-24	1st pump 'Tee' to 2nd pump suction
004.760	3/4" hose 90 x 90 x 300 @ 300°
25-26	Motor spool 'lower' to Hose mounting plate
004.746	3/4" hose 90 x 90 x 7050 @ 270°
27-28	Motor Spool 'Top' to Hose mounting plate
004.747	3/4" hose 90 x 90 x 6920 @ 270°
29-30	Hose mounting plate to Motor
004.748	3/4" hose ST x ST x 700

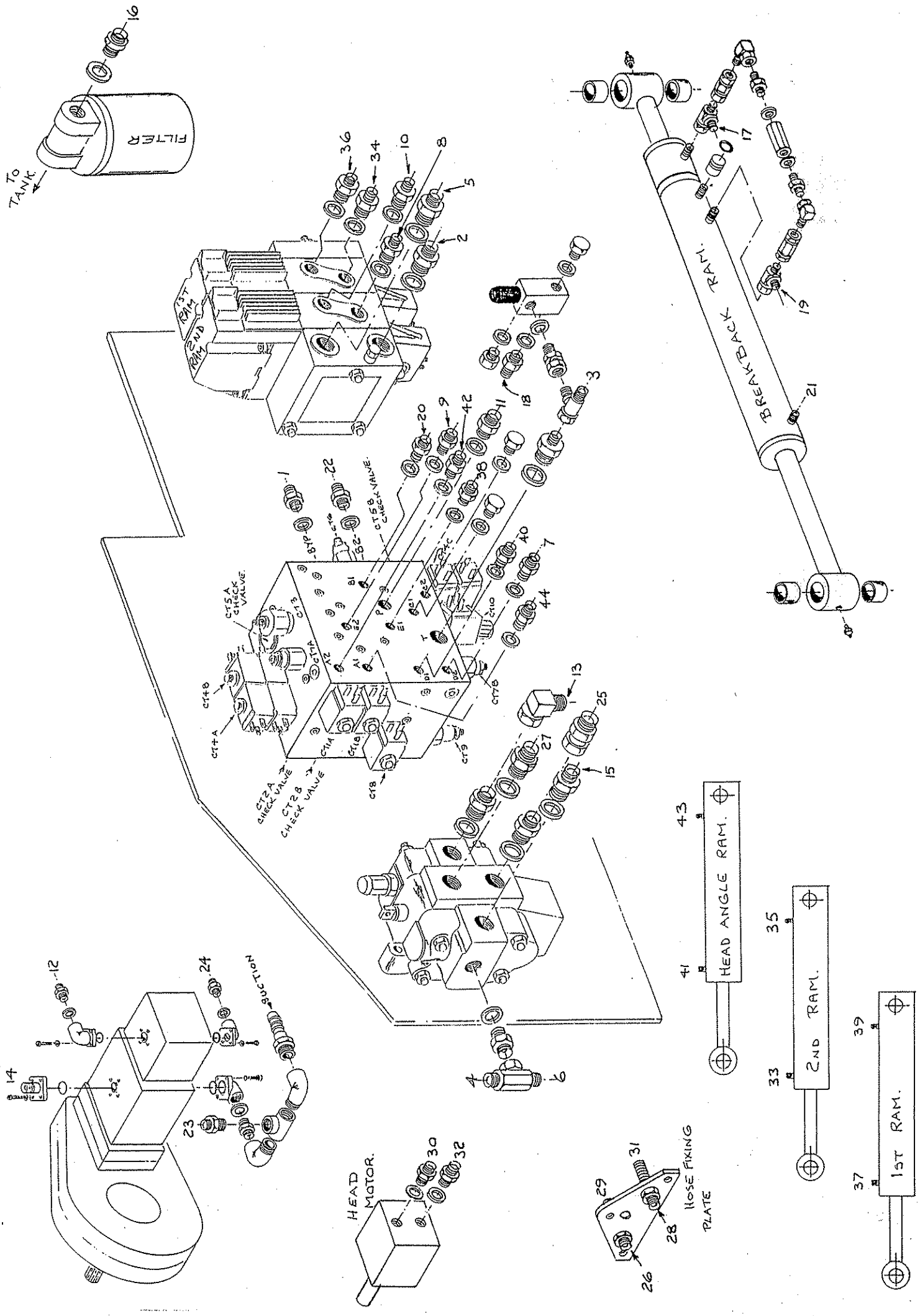
FILTER
TO TANK
1ST RAM
2ND RAM
BREAKBACK RAM
CT5A CHECK VALVE
CT5B CHECK VALVE
CT2A CHECK VALVE
CT2B CHECK VALVE
SUCTION
HEAD MOTOR
HOSE FIXING PLATE
HEAD ANGLE RAM
2ND RAM
1ST RAM

(520S RIE) HEDGETRIMMER
- LEFT HAND MACHINE
- HYPRO V3 MOTORSPOOL

HOSE CONNECTION POSITIONS AND HOSE DESCRIPTIONS CONTINUED

31-32	Hose mounting plate to Motor
004.748	3/4" hose ST x ST x 700
33-8	2nd Ram (Rod) to Danfoss
004.741	1/4" hose 90 x 90 x 2630 @ 180°
35-10	2nd Ram (Anchor) to Danfoss
004.742	1/4" hose 90 x 90 x 2080 @ 180°
37-38	1st Ram (Rod) to Integrated block 'E1'
004.761	1/4" hose 90 x 90 x 2330 @ 90°
39-40	1st Ram (Anchor) to Integrated block 'D1'
004.762	1/4" hose 90 x 90 x 2580 @ 90°
41-42	Head Angling Ram (Rod) to Integrated block 'A2'
004.745	1/4" hose 90 x 90 x 6490 @ 90°
43-44	Head Angling Ram (Anchor) to Integrated block 'A1'
004.745	1/4" hose 90 x 90 x 6490 '90°

Suction Hose 'Pump to Tank'
38mm I.D suction hose x 560 long

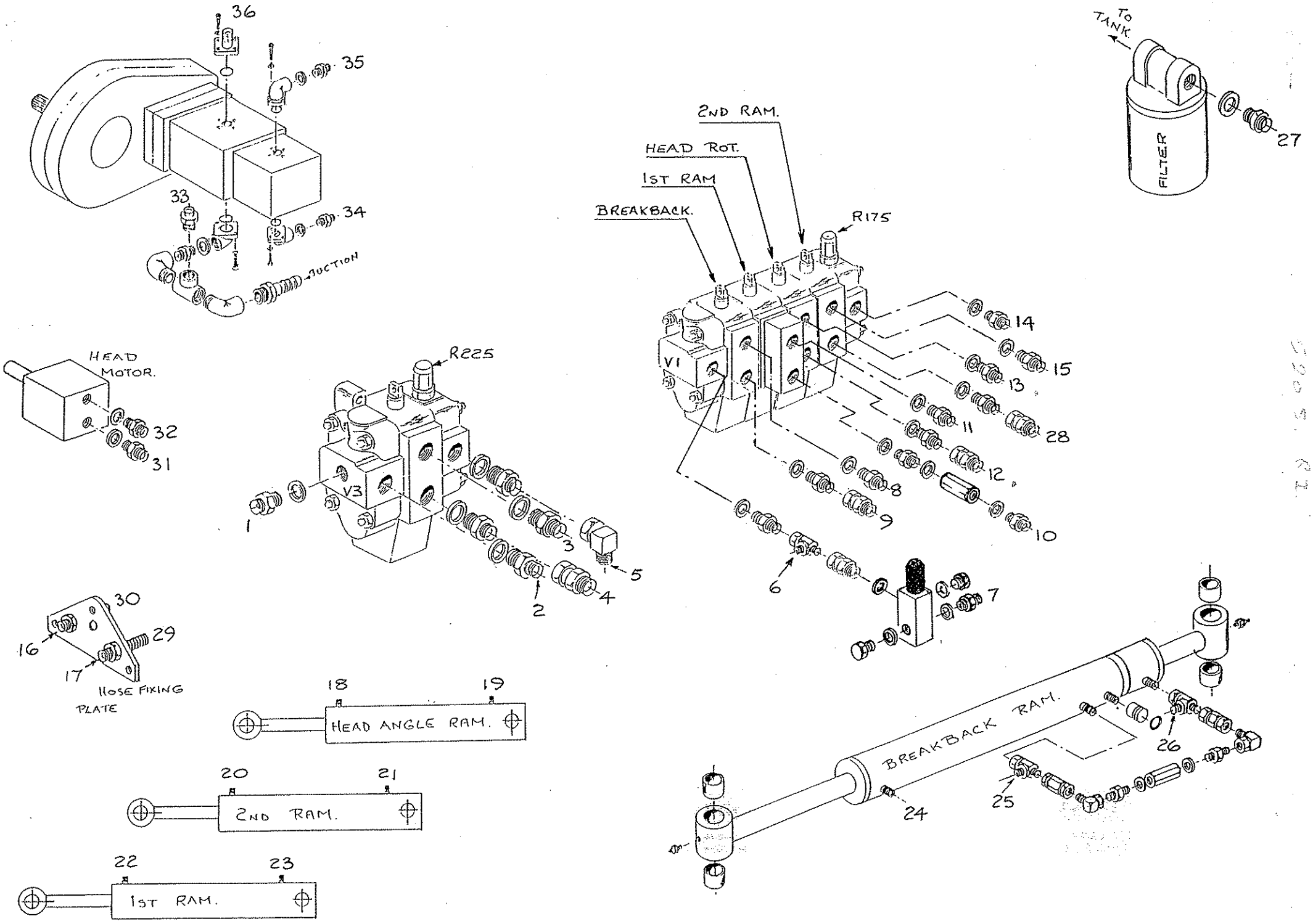
36
35
33
34
SUCTION
HEAD MOTOR.
32
31
R225
V3
1
2
3
4
5
30
29
16
17
HOSE FIXING PLATE
18
19
HEAD ANGLE RAM.
20
21
2ND RAM.
22
23
1ST RAM.
2ND RAM.
HEAD ROT.
1ST RAM
BREAKBACK.
R175
V1
14
15
13
28
11
12
8
9
10
6
7
TO TANK.
FILTER
27
BREAKBACK RAM.
26
25
24

HOSES AND CONNECTIONS

520SRI L/H WITH 'DS HEAD'

PART NO	DESCRIPTION	CONNECTIONS	CONN. NOS
	38mm ID Hose x 560	Tank - 1st Pump (Suction)	
004.733	1" Hose 90-90 x 510 @ 000°	V3-Oil Filter (Return)	2-27
004.734	3/4" Hose 90-90 x 465 @ 180°	1st Pump -V3 (Pressure)	36-5
004.735	3/4" Hose 90-90 x 340 @ 270°	1st Pump (Tee) - 2nd pump (Suction)	33-34
004.736	1/2" Hose 90 ST x 740	2nd Pump - V1 (pressure)	35-14
004.737	1/2" Hose 90-90 x 300 @30°	V1-V3 (Return)	1-6
004.738	1/4" Hose 90-90 x 985 @ 000°	B.B. Rod- V1 (Lower)	24-9
004.739	1/4" Hose 90-90 x 560 @ 270°	B B Cly - V1 (Top)	25-8
004.740	1/4" Hose 90-90 x 890 @ 120°	B B Anchor - B B (Relief)	26-7
004.741	1/4" Hose 90-91 x 2630 @ 180°	2nd Ram Rod - V1 (Lower)	20-28
004.742	1/4" Hose 90-91 x 2080 @ 180°	2nd Ram Anchor - V1 (Top)	21-15
004.743	1/4" Hose 90-91 x 1840 @ 90°	1st Ram Rod - V1 (Top)	22-11
004.744	1/4" Hose 90-91 x 1500 @ 90°	1st Ram Anchor - V1 (Lower)	23-10
004.745	1/4" Hose 90-91 x 6490 @ 90°	Head Angling Rod - V1 (Lower)	18-12
004.745	1/4" Hose 90-91 x 6490 @ 90°	Head Angling Anchor - V1 (Top)	19-13
004.746	3/4" Hose 90-90 x 7050 @ 270°	V3 (Lower) - Head Pivot	4-6
004.747	3/4" Hose 90-90 x 6920 @ 270°	V3 (Top) - Head Pivot	3-17
004.748	3/4" Hose ST x ST x 700	Head Pivot - Head Motor	29-31
004.748	3/4" Hose ST x ST x 700	Head Pivot - Head Motor	30-32

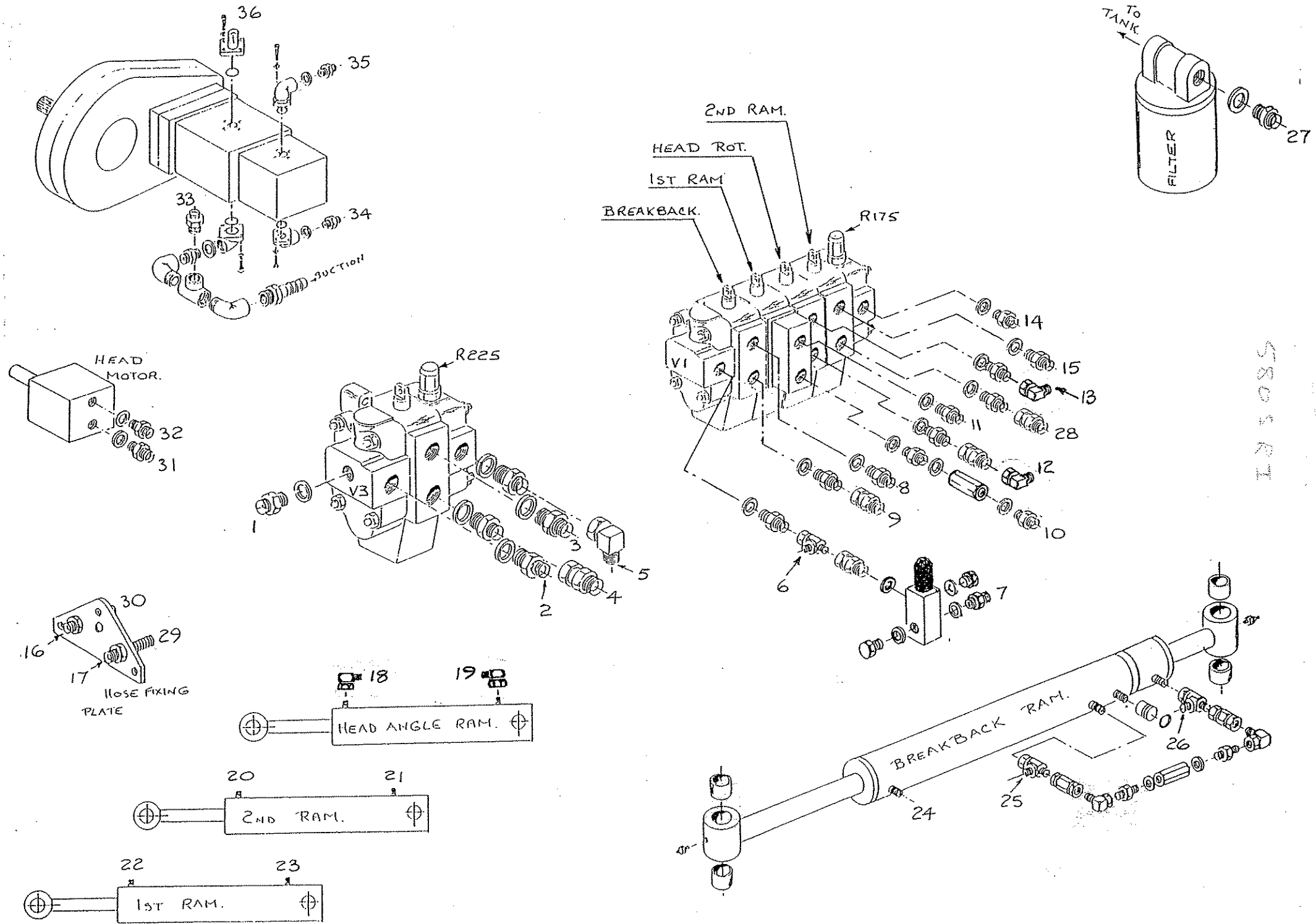
36
35
33
34
SUCTION
HEAD MOTOR.
32
31
R225
V3
1
2
3
4
5
30
29
16
17
HOSE FIXING PLATE
18
19
HEAD ANGLE RAM.
20
21
2ND RAM.
22
23
1ST RAM.
2ND RAM.
HEAD ROT.
1ST RAM
BREAKBACK.
R175
V1
14
15
13
28
11
12
8
9
10
6
7
TO TANK
FILTER
27
BREAKBACK RAM.
0
26
25
24

HOSES AND CONNECTIONS

580SRI L/H WITH 'DS HEAD'

PART NO	DESCRIPTION	CONNECTIONS	CONN. NOS
	38mm ID Hose x 560	Tank - 1st Pump (Suction)	
004.733	1" Hose 90-90 x 510 @ 000°	V3-Oil Filter (Return)	2-27
004.734	3/4" Hose 90-90 x 465 @ 180°	1st Pump -V3 (Pressure)	36-5
004.735	3/4" Hose 90-90 x 340 @ 270°	1st Pump (Tee) - 2nd pump (Suction)	33-34
004.736	1/2" Hose 90 ST x 740	2nd Pump - V1 (pressure)	35-14
004.737	1/2" Hose 90-90 x 300 @30°	V1-V3 (Return)	1-6
004.738	1/4" Hose 90-90 x 985 @ 000°	B.B. Rod- V1 (Lower)	24-9
004.739	1/4" Hose 90-90 x 560 @ 270°	B B Cly - V1 (Top)	25-8
004.740	1/4" Hose 90-90 x 890 @ 120°	B B Anchor - B B (Relief)	26-7
004.741	1/4" Hose 90-91 x 2630 @ 180°	2nd Ram Rod - V1 (Lower)	20-28
004.742	1/4" Hose 90-91 x 2080 @ 180°	2nd Ram Anchor - V1 (Top)	21-15
004.743	1/4" Hose 90-91 x 1840 @ 90°	1st Ram Rod - V1 (Top)	22-11
004.744	1/4" Hose 90-91 x 1500 @ 90°	1st Ram Anchor - V1 (Lower)	23-10
004.763	3/8" Hose (1/4 ends) ST x ST x 7090	Head Angling Rod - V1 (Lower)	18-12
004.763	3/8" Hose (1/4 ends) ST x ST x 7090	Head Angling Anchor - V1 (Top)	19-13
004.764	3/4" Hose 90-90 x 7650 @ 270°	V3 (Lower) - Head Pivot	4-6
004.764	3/4" Hose 90-90 x 7520 @ 270°	V3 (Top) - Head Pivot	3-17
004.748	3/4" Hose ST x ST x 700	Head Pivot - Head Motor	29-31
004.748	3/4" Hose ST x ST x 700	Head Pivot - Head Motor	30-32

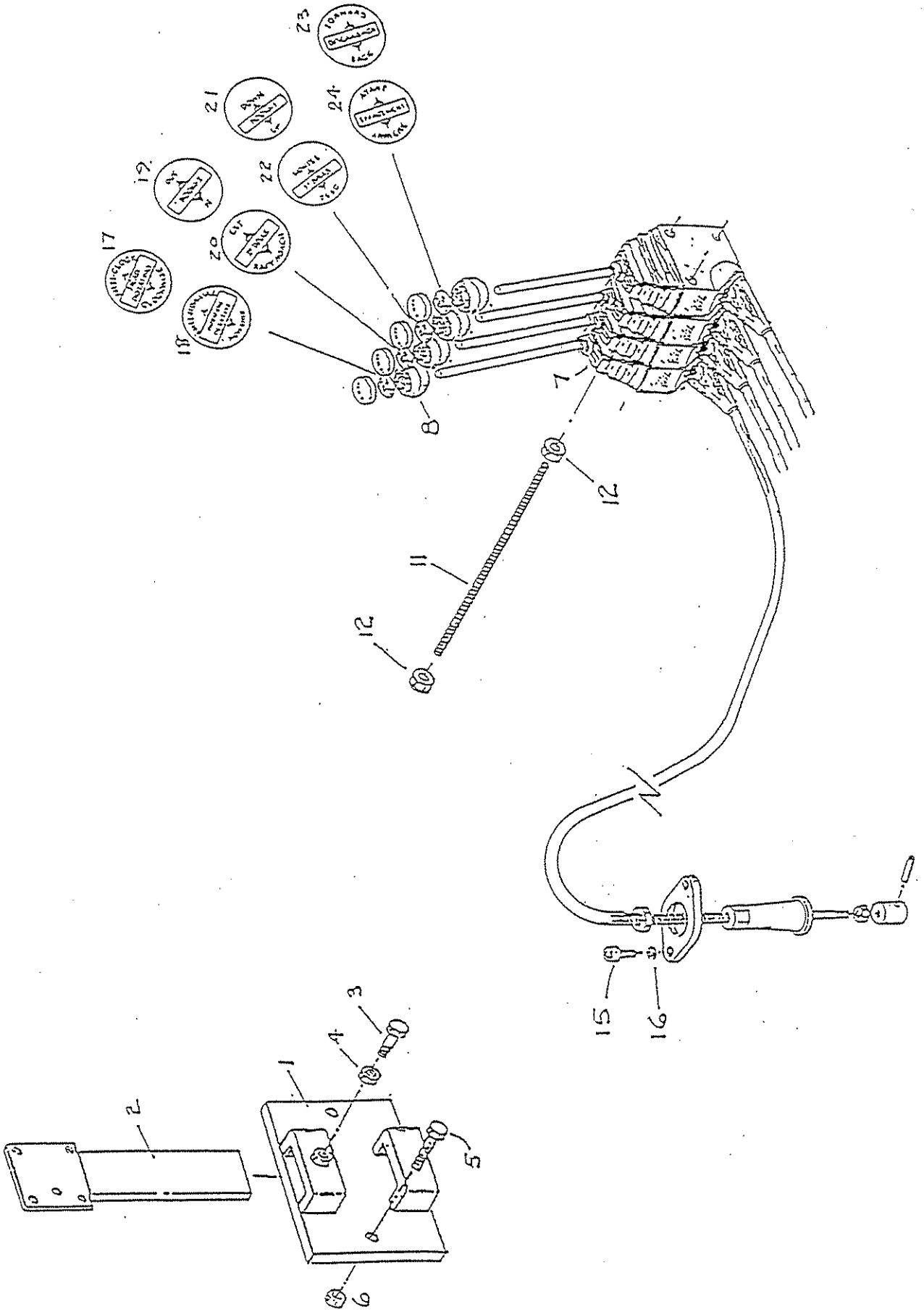
23
21
24
22
19
17
20
18
8
7
12
11
12
15
16
2
1
4
3
5
6

CONTROL LEVERS AND MOUNTING (T.M.C CONTROLLERS)

BLACK CABLES

ITEM	PART NO	DESCRIPTION	QTY
1	184.257	Mounting Bracket - "to tractor"	
2	184.258	Controller Support Bracket	1
3	2962	Setscrew M12 x 3 5	1
4	2721	Nut M12	1
5	3730	Setscrew M8 x 40	2
6	3182	Nyloc Nut M8	2

4 BANK CONTROLLERS ONLY (AS FOR 'R' MACHINES)

7	7822	Complete Controller	
8	7835	Knob - (black) with lens	4
11	184.481 A	Tie Bolt-Stud (M6 x 190)	3
12	4776	M8 Nyloc Stifffinut	6
15	4695	Caphead Screw M6 x 15	8
16	2731	Spring Washer M6	8
17	1840501	Head Rotating "Transfer" (English)	1
18 OR	1840501F	Head Rotating "Transfer" (French)	1
19	1840374	Boom '2' Transfer (English)	1
20 OR	1840374F	Boom '2' Transfer (French)	1
21	1840373	Boom '1' Transfer (English)	1
22 OR	1840373F	Boom '1' Transfer (French)	1
23	1840372	Breakback Transfer (English)	1
23 OR	1840372F	Breakback Transfer (French)	1

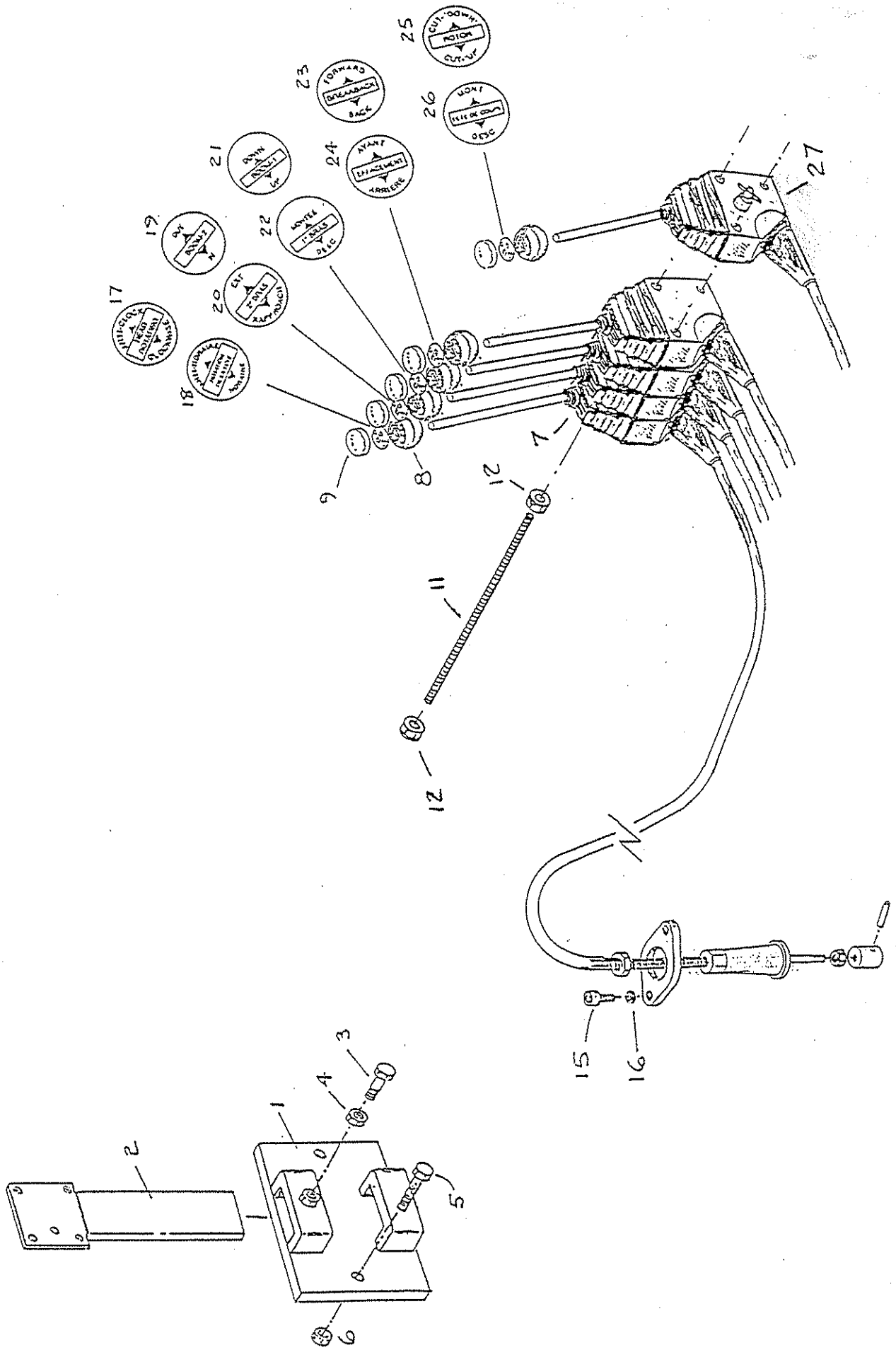
25
23
26
21
24
19
22
17
20
18
9
8
12
7
11
12
27
15
16
1
2
3
4
5
6

5-BANK CONTROLLERS (AS FOR RI) MACHINES (T.M.C CONTROLLERS)

BLACK CABLES

ITEM	PART NO	DESCRIPTION	QTY
7	7822	Complete Controller	
8	7835	Knob (Black) with lens	4
9	7836	Knob (Red) with lens	1
11	184.481B	Tie bolt stud (M6 x 275)	3
12	4776	M6 Nyloc Stiffhut	6
15	4695	Caphead Screw M6 x 15	10
16	2731	Spring Washer M6	10
17	1840375	Head Rotating Transfer (English)	1
18	1840375F	Read Rotating Transfer (French)	1
19	1840374	Boom '2' Transfer (English)	1
20	1840374F	Boom '2' Transfer (French)'	1
21	1840373	Boom '1' Transfer (English)	1
22	1840373F	Boom '1' Transfer (French)	1
23	1840372	Breakback Transfer (English)	1
24	1840372F	Breakback Transfer (French)	1
25	1840371	Rotation-cut Transfer (English)	1
26	1840371F	Rotation-cut Transfer (French)	1
27	7823	Controller Complete (Baulk Lock)	1

FAULT FINDING CHART

BREAKBACK RAM NOT OPERATIVE	CHECK FOR 12V ON PLUGS 3 & 4	FAULTY HYDRAULIC VALVE
		FAULTY WIRING OR SWITCH
BREAKBACK GIVES TOO EASILY	RESET RELIEF VALVE ON RAM (SHOULD BE SET TO 2000 P.S.I)(136 BAR)	
NO HEAD ROTATION	CHECK FOR 12V ON PLUGS 5 & 6	FAULTY HYDRAULIC VALVE
		FAULTY WIRING OR DANFOSS SWITCH
SLOW HEAD ROTATION OR <360°	RELIEF VALVE NEEDS RE-SETTING (SHOULD BE SET TO 2250PSI) (153 BAR)	
SECOND RAM INOPERATIVE	CHECK FOR 12V ON PIN 1 AND 3-9V ON PIN 2 OF PLUG 7	FAULTY HYDRAULIC VALVE
		FAULTY WIRING OR DANFOSS CONTROL HANDLE
MAIN RAM INOPERATIVE	CHECK FOR 12V ON PIN 1 AND 3-9V ON PIN 2 OF PLUG 8	FAULTY HYDRAULIC VALVE
		FAULTY WIRING OR DANFOSS CONTROL HANDLE
	FLOAT ON/OFF VALVE STUCK IN OPEN POSITION - SEE FLOAT SYSTEM	

FAULT FINDING CHART CONTINUED

NO FLOAT LAMP ON	PROPORTIONAL RELIEF VALVE NOT WORKING - CHECK VOLTAGE ON PLUG 1. SHOULD RANGE FROM OV TO 9V AS FLOAT CONTROL KNOB IS TUNED	IS HYDRAULIC ON/OFF VALVE 2 OPERATING. IF MACHINE AND TRACTOR SETTLE WHEN FLOAT SWITCH IS OPERATED THEN THIS VALVE IS WORKING	FAULTY PROPORTIONAL RELIEF VALVE	
			CHECK 12V ON PLUG 2	FAULTY HYDRAULIC VALVE
				FAULTY WIRING
		CHECK OUTPUT ON TERMINAL 11 ON VOLTAGE REGULATOR BOARD. (SHOULD BE 0V TO 9V)		FAULTY WIRING
				FAULTY BOARD OR POTENTIO-METER
	DANFOSS VALVE NOT OPERATING CHECK FOR 12V ON PLUG 8	FAULTY VALVE		
	NOTE:- THIS VALVE CAN BE VISUALLY CHECKED BY FITTING AN OPERATING LEVER & "MANUAL OPERATE" LOOKING FOR MOVEMENT.	FAULTY WIRING		
NO FLOAT LAMP OPER-ATE	FLOAT SWITCH FAULTY			

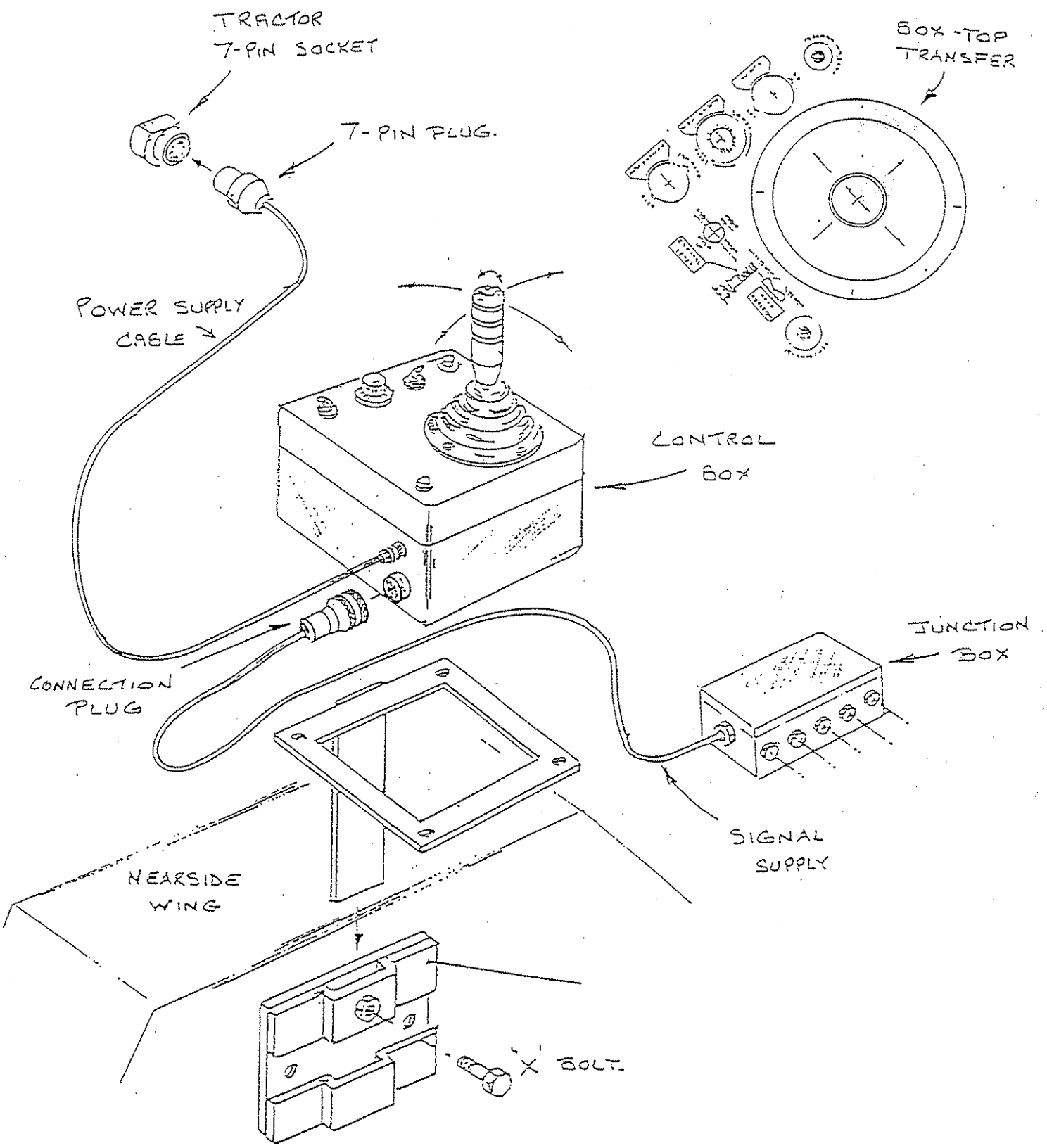
TRACTOR
7-PIN SOCKET
7-PIN PLUG.
BOX-TOP
TRANSFER
POWER SUPPLY
CABLE
CONTROL
BOX
JUNCTION
BOX
CONNECTION
PLUG
SIGNAL
SUPPLY
NEARSIDE
WING
'X' BOLT.

8177/sb/0299

ELECTRIC MACHINE - CONTROL COMPONENTS

ITEM	PART NO	DESCRIPTION	QTY
	184.200	Wiring Harness (Mch Side)	1
		COMPRISING THE FOLLOWING:-	
	184.174	Wire Green/Yellow 85 Lg	2
	184.191	Cable Twin x 770 Lg	2
	184.192	Cable Twin x 1180 Lg	4
	184.194	Cable Twin x 1700 Lg	1
	184.197	Cable Triple x 920 Lg	2
	184.198	Cable 12 Core x 3000	1
	184.199	Box. Modified 7629	1
	1840186	Transfer for 12 Way Term	1
	1840187	Transfer for Gland 1-5	1
	1840188	Transfer for Gland 6-10	1
	7211	Plug 7 Pin Electrical	1
	7592	Diode RS: 261-306	2
	7600	Plug, electrical RS: 480-333	1
	7637	Terminal Block 12 Way RS: 425-055	1
	7637	Terminal Block 12 Way RS: 452-055	1
	7638	Cable Gland RS: 544-011	10
	7639	Cable Gland RS: 614-053	1
	7644	Fullnut M3 RS: 527-230	2
	7646	Setscrew M3 * 20 RS: 523-840	2
	7647	Tube Heatshrink 1.2m RS: 399-934	0.1
	7649	Terminal Block 12 Way RS: 425-077	1
	7722	Tie Cable Small Nylon RS: 543-428	6

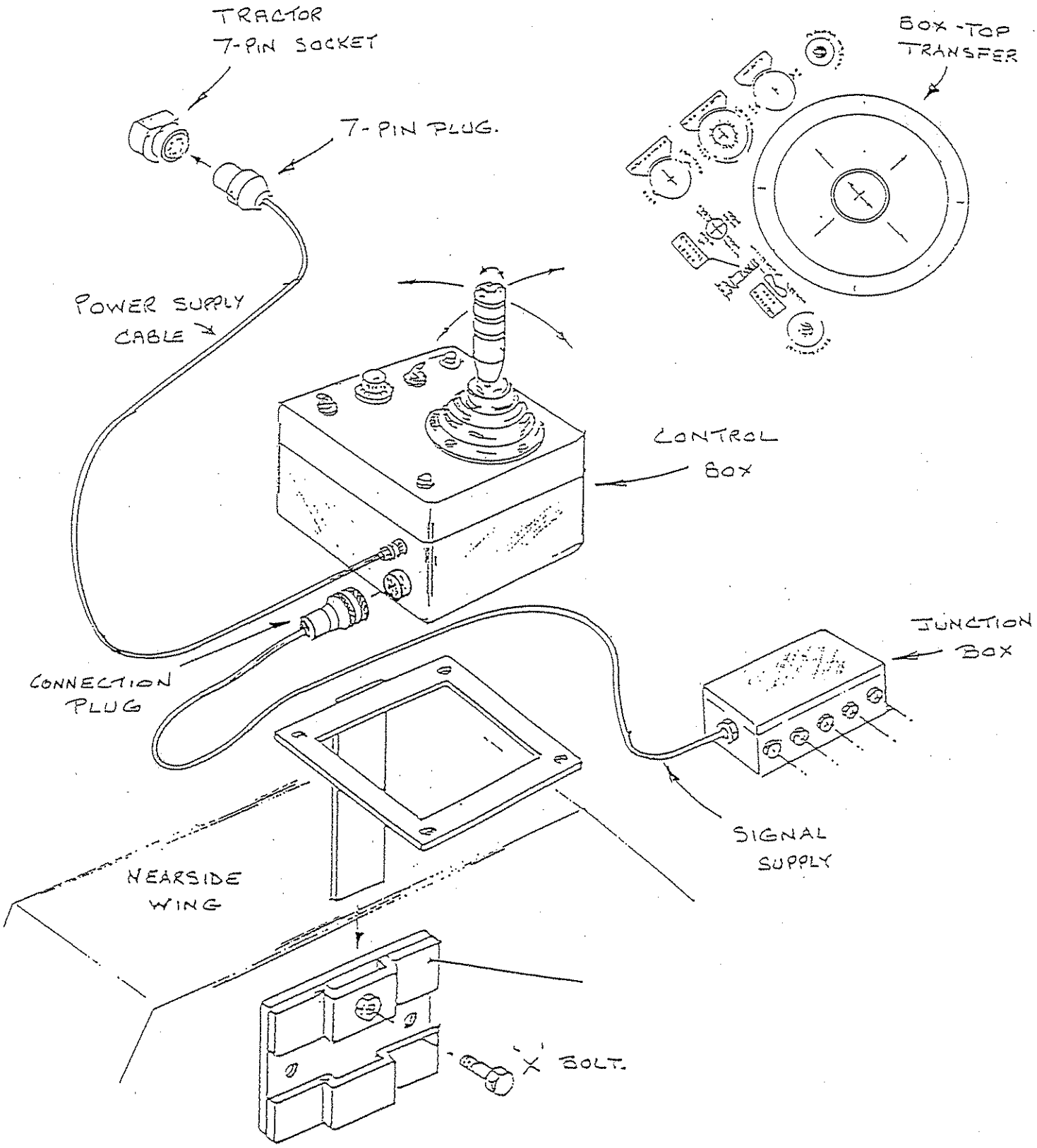
TRACTOR
7-PIN SOCKET
7-PIN PLUG.
BOX-TOP
TRANSFER
POWER SUPPLY
CABLE
CONTROL
BOX
JUNCTION
BOX
CONNECTION
PLUG
SIGNAL
SUPPLY
NEARSIDE
WING
'X' BOLT.

ELECTRIC MACHINE - CONTROL COMPONENTS CONTINUED

ITEM	PART NO	DESCRIPTION	QTY
	184.201	Control Box (Tractor Side)	1
		COMPRISING THE FOLLOWING:-	
	184.142	Wire Assy Red/Blue c/w conns	1
	183.153	Lid for Control Box	1
	184.154	Box Control	1
	184.155	Base for Control Box	1
	184.156	Mtg Rail Din 46277-3 75 Lg	1
	184.157	Circuit Board	1
	184.159A	Wire Assy Red/Blue c/w conns	1
	184.159B	Wire Assy Red/Blue c/w conns	1
	184.160A	Wire Assy Green/Yellow c/w conns	1
	184.160B	Wire Assy Brown c/w conns	1
	184.161	Wire Assy Red/Black c/w Conns	1
	184.162	Wire Assy Grey/Blue 440 lg c/w Conns	1
	184.163	Wire White/Red 340 Lg c/w Conn	1
	184.164	Wire Pink 400 Lg c/w Conn	1
	184.165	Wire Orange 400 Lg c/w Conn	1
	184.166	Wire Grey 400 Lg c/w Conn	1

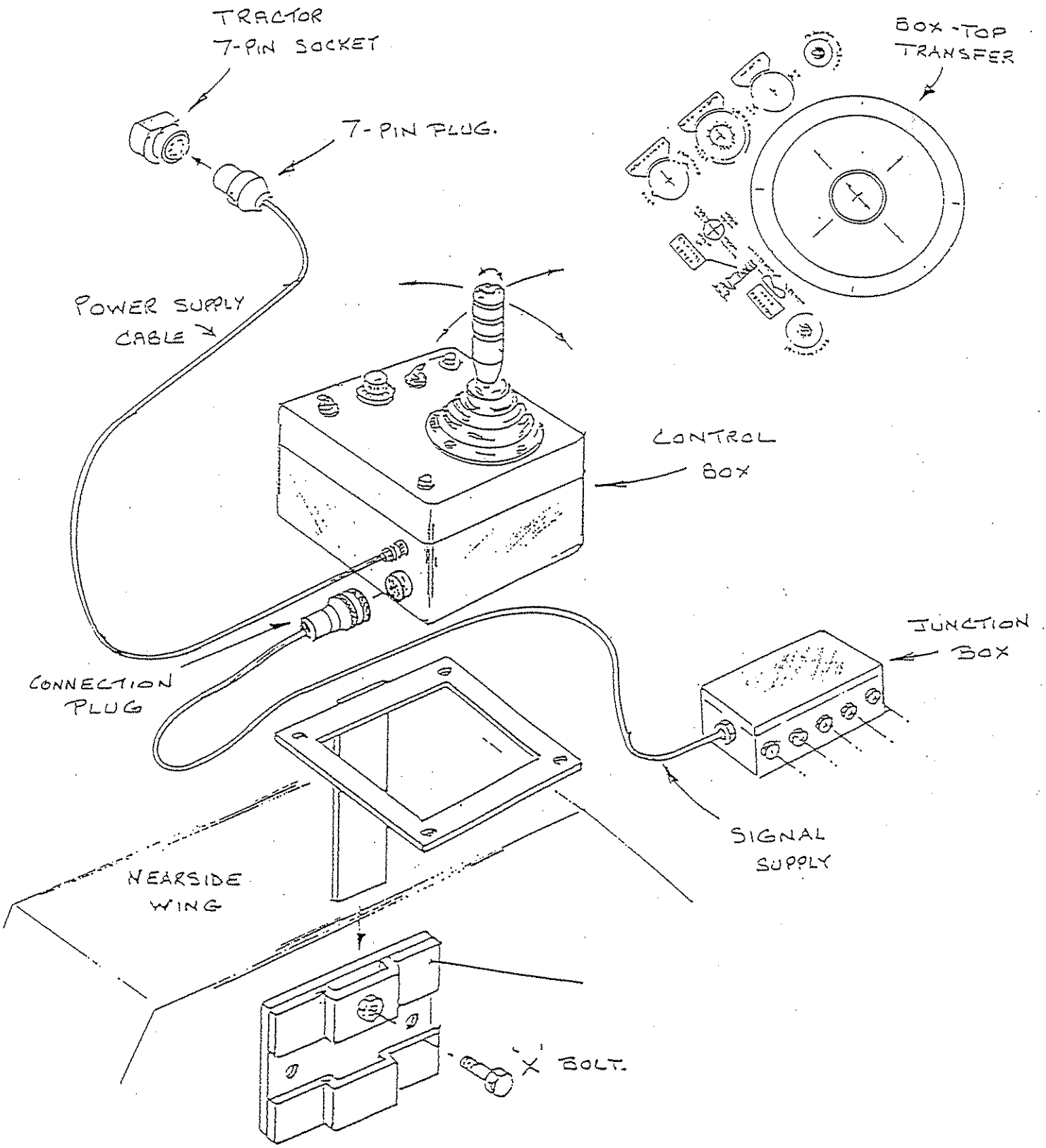
TRACTOR
7-PIN SOCKET
7-PIN PLUG.
BOX-TOP
TRANSFER
POWER SUPPLY
CABLE
CONTROL
BOX
JUNCTION
BOX
CONNECTION
PLUG
SIGNAL
SUPPLY
NEARSIDE
WING
'X' BOLT.

ELECTRIC MACHINE - CONTROL COMPONENTS CONTINUED

ITEM	PART NO	DESCRIPTION	QTY
	184.167	Wire Brown 400 Lg c/w Conn	1
	184.168	Wire Green/Red 400 Lg c/w Conn	1
	184.169	Wire Blue 440 Lg c/w Conn	1
	184.170	Wire Red 440 Lg c/w Conn	1
	184.171	Wire Brown 50 Lg	1
	184.172	Wire Black 140 Lg	1
	184.173	Wire Red/Blue 50 Lg	1
	184.174	Wire Green/Yellow 85 Lg	2
	184.176	Wire Pink 160 Lg	1
	184.177	Wire Orange/Black 110 Lg	1
	184.178	Wire Yellow 150 Lg	2
	184.179	Wire White 180 Lg	1
	184.180	Wire Red/Black 150 Lg	1
	184.181	Wire Red/Blue 150 Lg	1
	184.182	Wire Green/Yellow x 110 Lg	1
	184.183	Wire Green/Yellow 250 Lg	1
	184.184	Wire Brown 360 Lg	1
	184.185	Wire White/Black 320 Lg	1
	184.189	Transfer	1
	184.194	Cable Twin x 1700 Lg	1
	184.262	Bracket Joystick Mtg	1
	1840508	Transfer for Joystick	1
	3447	Washer M5 Form C Bright Plated	2

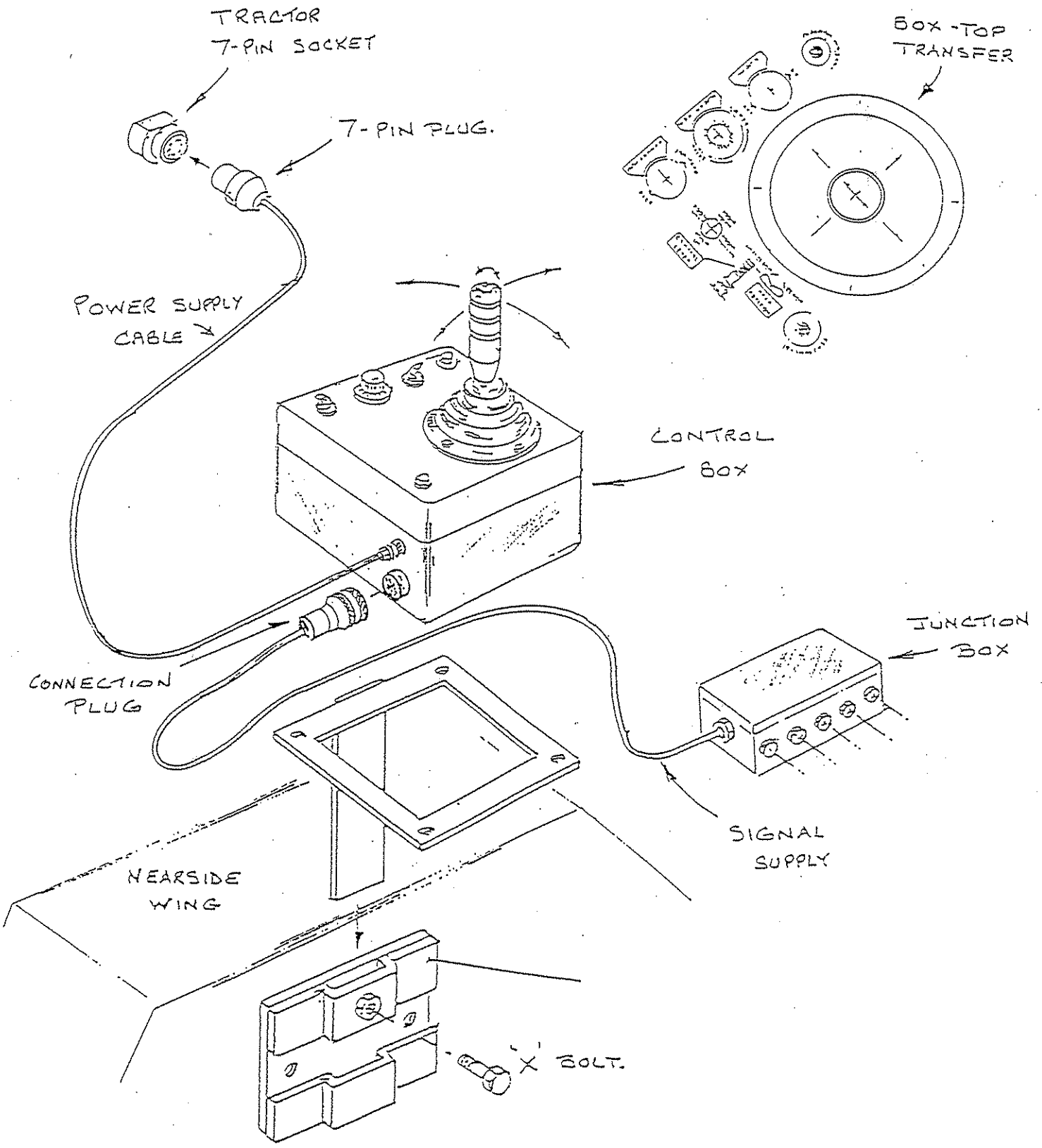
TRACTOR
7-PIN SOCKET
7-PIN PLUG.
BOX-TOP
TRANSFER
POWER SUPPLY
CABLE
CONTROL
BOX
JUNCTION
BOX
CONNECTION
PLUG
SIGNAL
SUPPLY
NEARSIDE
WING
'X' BOLT.

ELECTRIC MACHINE - CONTROL COMPONENTS CONTINUED

ITEM	PART NO	DESCRIPTION	QTY
	184.201	Control Box (Tractor Side)	1

COMPRISING THE FOLLOWING:-

	4776	Stiffnut M6 Nyloc	2
	7211	Plug 7 pin electrical	1
	7578	Joystick 155B 4275 PVRE	1
	7588	Potentiometer 1Kohm RS 173-388	1
	7593	Knob RS 509-973	1
	7594	Relay 4PCO 12V dc RS 348-879	2
	7595	Base for Relay RS 403-257	2
	7596	Switch for BBack 3 Way Autolec 0-496-00	1
	7597	Switch for float RS 316-822	2
	7598-B	Lampholder Blue RS 564-920	1
	7598-R	Lampholder Red Rs 564-958	1
	7599	Bulb for 7598 RS 587-939	2
	7602	Toggle Cover RS 316-967	2
	7603	Fuseholder RS 414-099	1
	7634	Fuse 5 amp RS 412-576	1
	7636	Spacer Insulated RS 601-158	2

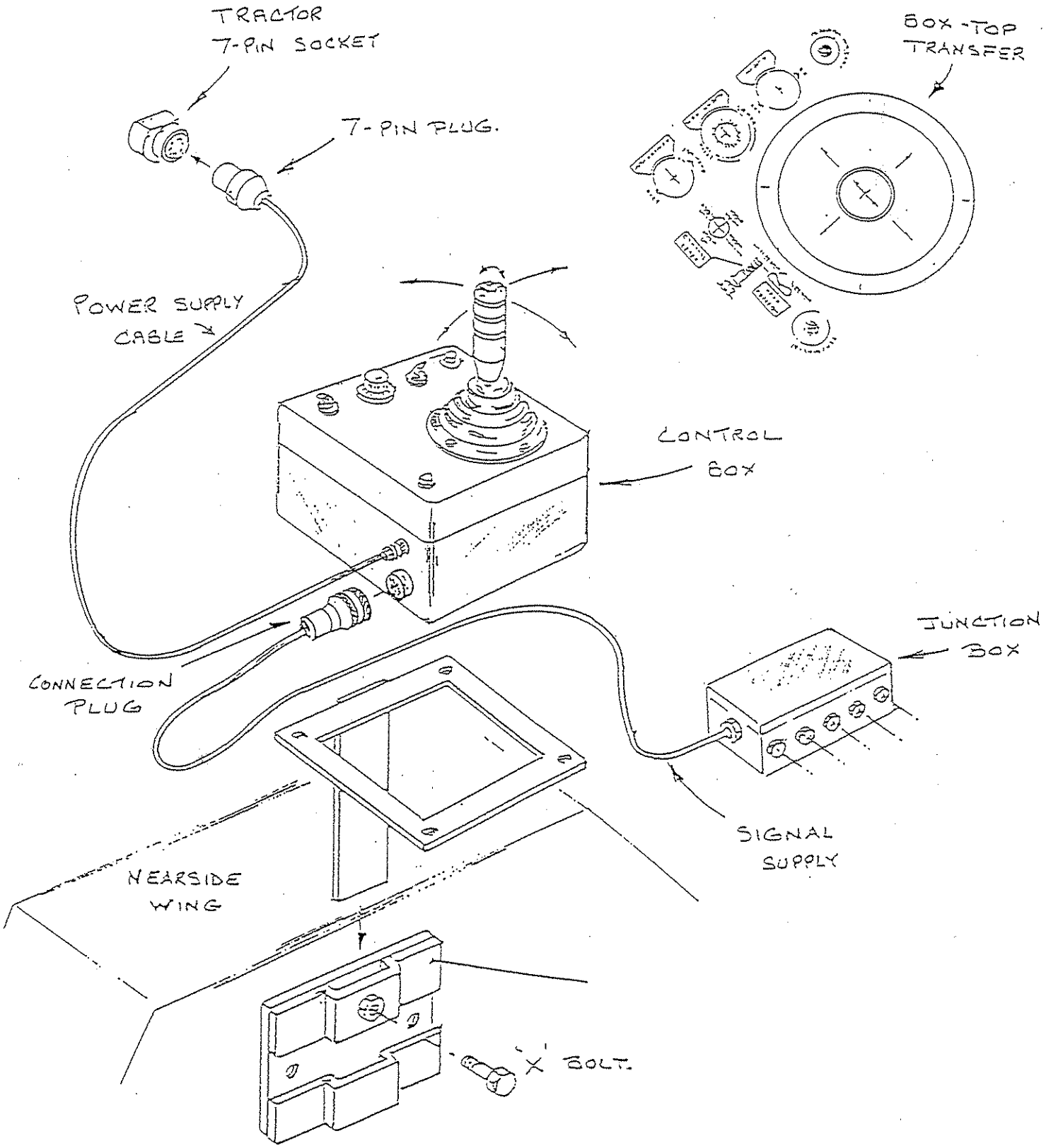
TRACTOR
7-PIN SOCKET
7-PIN PLUG.
BOX-TOP
TRANSFER
POWER SUPPLY
CABLE
CONTROL
BOX
JUNCTION
BOX
CONNECTION
PLUG
SIGNAL
SUPPLY
NEARSIDE
WING
'X' BOLT.

ELECTRIC MACHINE - CONTROL COMPONENTS CONTINUED

ITEM	PART NO	DESCRIPTION	QTY
	7638	Cable Gland RS 544-011	1
	7642	Setscrew M4 * 12 Chshd RS 523-890	4
	7643	Fullnut M4 RS 525-896	4
	7644	Fullnut M3 RS 527-230	4
	7645	Setscrew M3 * 6 RS 523-828	4
	7648	Setscrew M6 * 25 Chshd RS 523-963	4
	7649	Terminal Block (12 Way)	0.25
	7722	Tie Cable Small Nylon RS 543-428	4
	8024	Socket Electrical RS 467-201	1

ELECTRONIC PROPORTIONAL CONTROL BOOM FLAIL

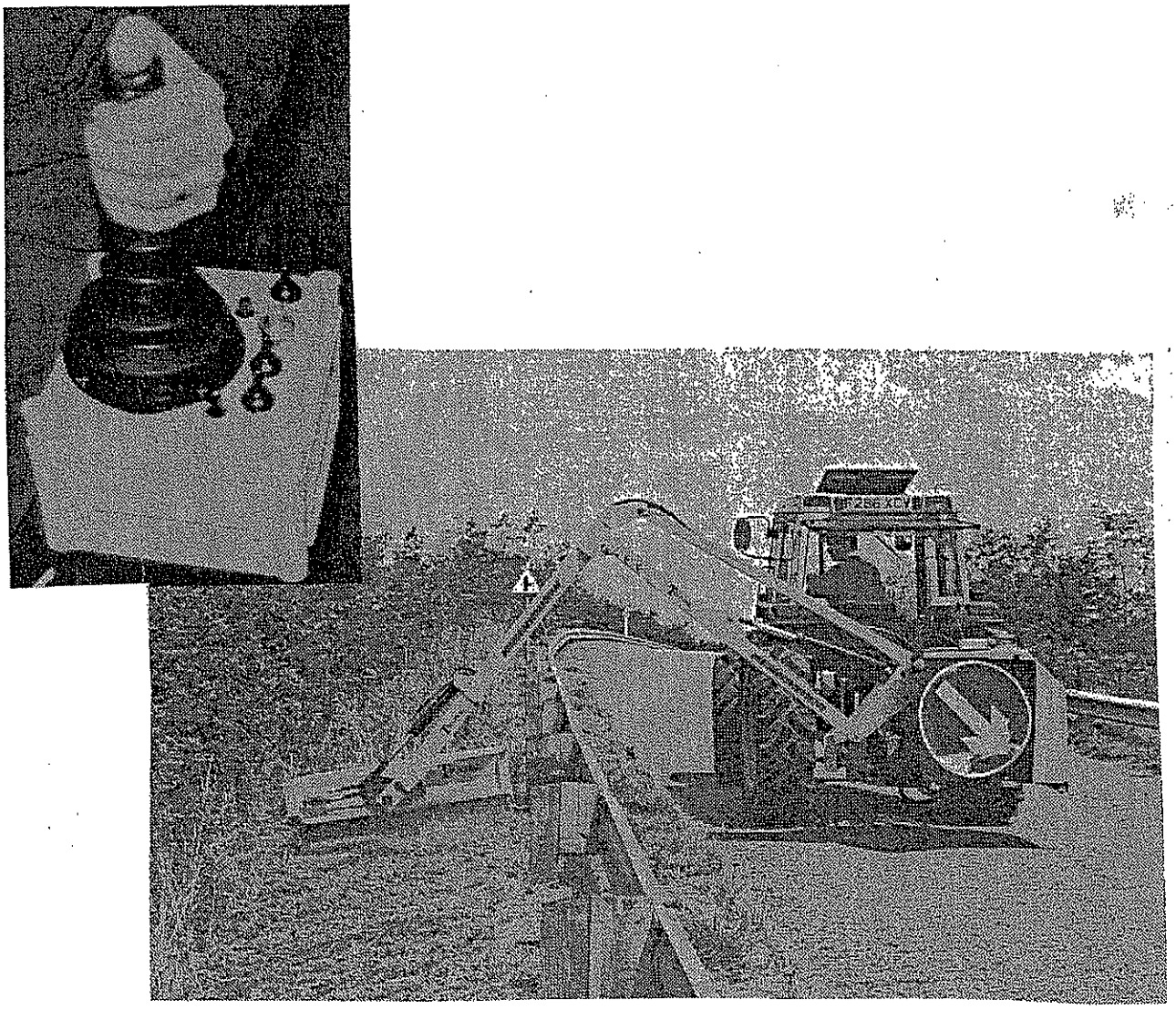

7736/sl/09/99

ELECTRIC CONTROL MACHINE

The electronic - proportional valve control boom flails feature at the upper end of the Twose flail range.

These models include all basic specifications as listed for non- electric control machines but - have the added advantages of:-

1. Fingertip - Joystick control
2. Proportional valve control
3. Power float facility

The main hardmetal components - such as Tank, Booms, Head etc. remain unchanged as only controls and specification alter.

The power supply required to operate the electrical components - proportional valves etc, is taken from the tractor 7 pin rear trailer socket. The side light terminals being the contact points used as power supply, which means therefore that tractor side lights MUST be ON at all times that flail is used.

The power float system incorporated to enable 'more' or 'less' pressure to head contact to floor. This system will reduce downward weight - pressure and therefore reduce 'drag' on head, which in turn protects the booms and pivots by reducing load on each item/component.

7736/sl/09/99

ATTACHING 'ELECTRIC' BOOM FLAIL MACHINE TO TRACTOR

DANGER ENSURE AREA WHERE COUPLE-UP OPERATION IS TO TAKE PLACE IS CLEAR AND FREE FROM OBJECTS AND BYSTANDERS

DANGER
IMPORTANT ASSURE FLAIL IS PARKED ON GOOD LEVEL - SOLID SITE

NOTE The electric joystick control lever box is supplied from the factory "as a complete assembly" which will be already bolted to its mounting stand.

First - the control box locating bracket should be positioned to inner wing face at a suitable position to suit operator/lever operation. Secure support bracket to wing in chosen/selected position with bolts. Fixing of this bracket will depend on whether machine is L.H or R.H cut.

- For left hand cut machines - fit support bracket to inner face of nearside wing.

- For right hand cut machines - fit support bracket to inner face of offside wing.

With support bracket secured into position (to inner wing) - the control box mounting leg should be lowered into slot of locating bracket (see drawing below) and secured by tightening screw 'X' clockwise.

7736/sl/09/99

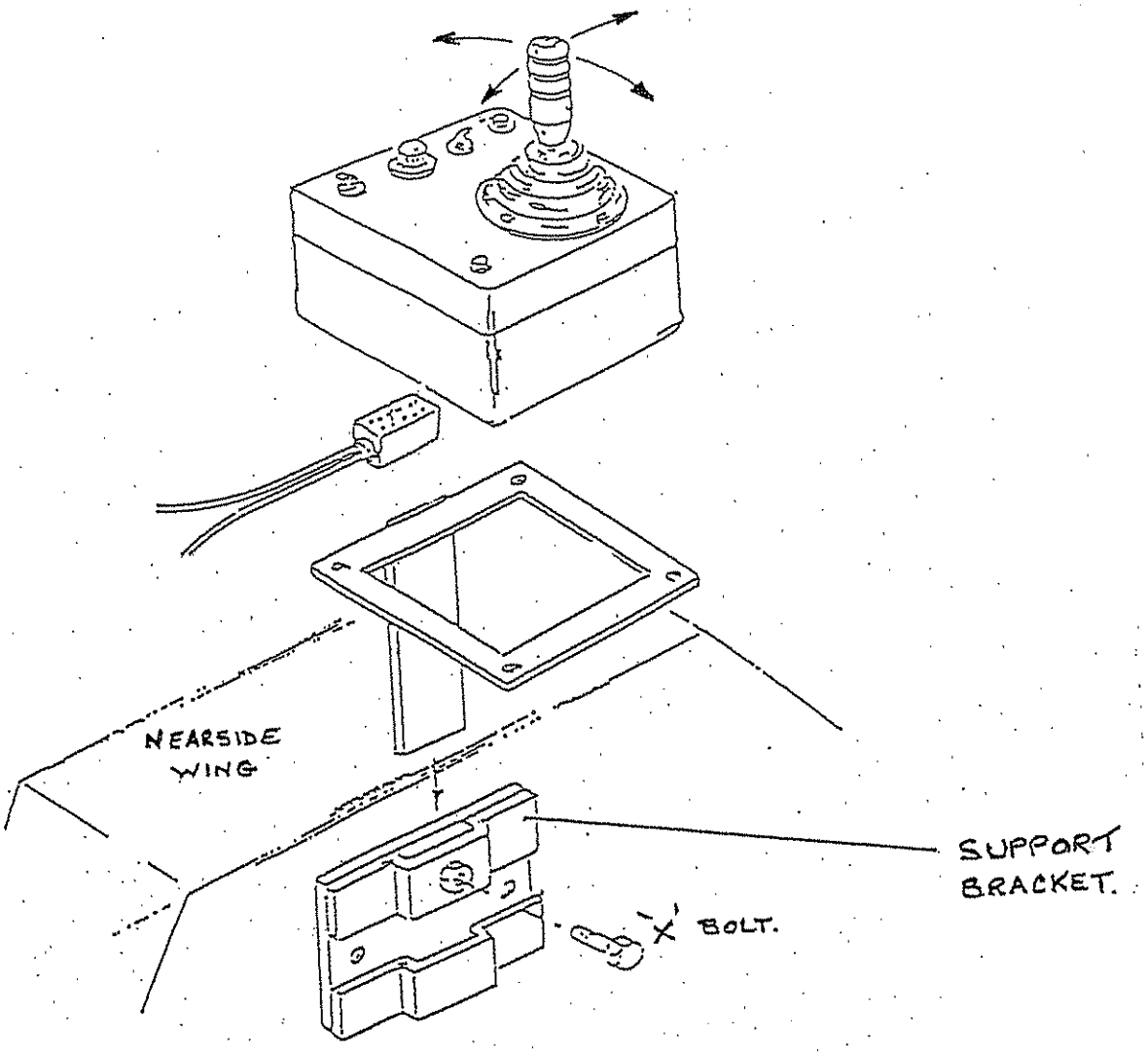

Drawing shows layout of electrical control box fitted to inner nearside wing - to suit a lefthand cut machine.

7736/sl/09/99

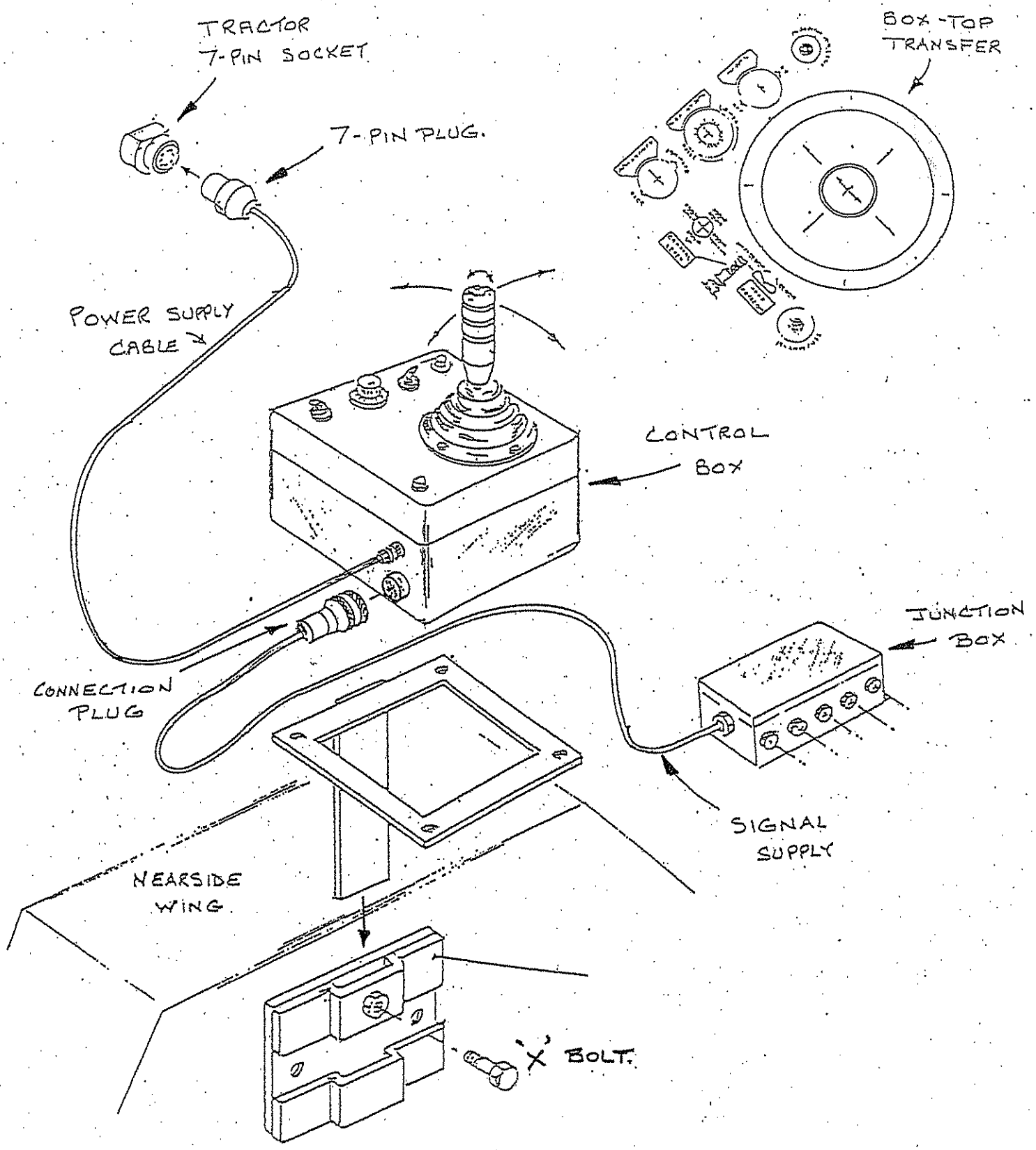
TRACTOR
7-PIN SOCKET
7-PIN PLUG.
BOX-TOP
TRANSFER
POWER SUPPLY
CABLE
CONTROL
BOX
JUNCTION
BOX
CONNECTION
PLUG
SIGNAL
SUPPLY
NEARSIDE
WING
'X' BOLT.

7736/sl/09/99

MAIN FLOAT (RED LAMP) [only required when Bank/verge cutting]

1/ Ensure head is resting on floor.

2/ Switch float ON (red light will show) see drawing below for ref. to switch and lamp.

3/ Adjust float pressure by turning potentiometer knob either clockwise for lighter/raise, or anti-clockwise for heavier/down pressure.
(Drawing below indicates float control section.)

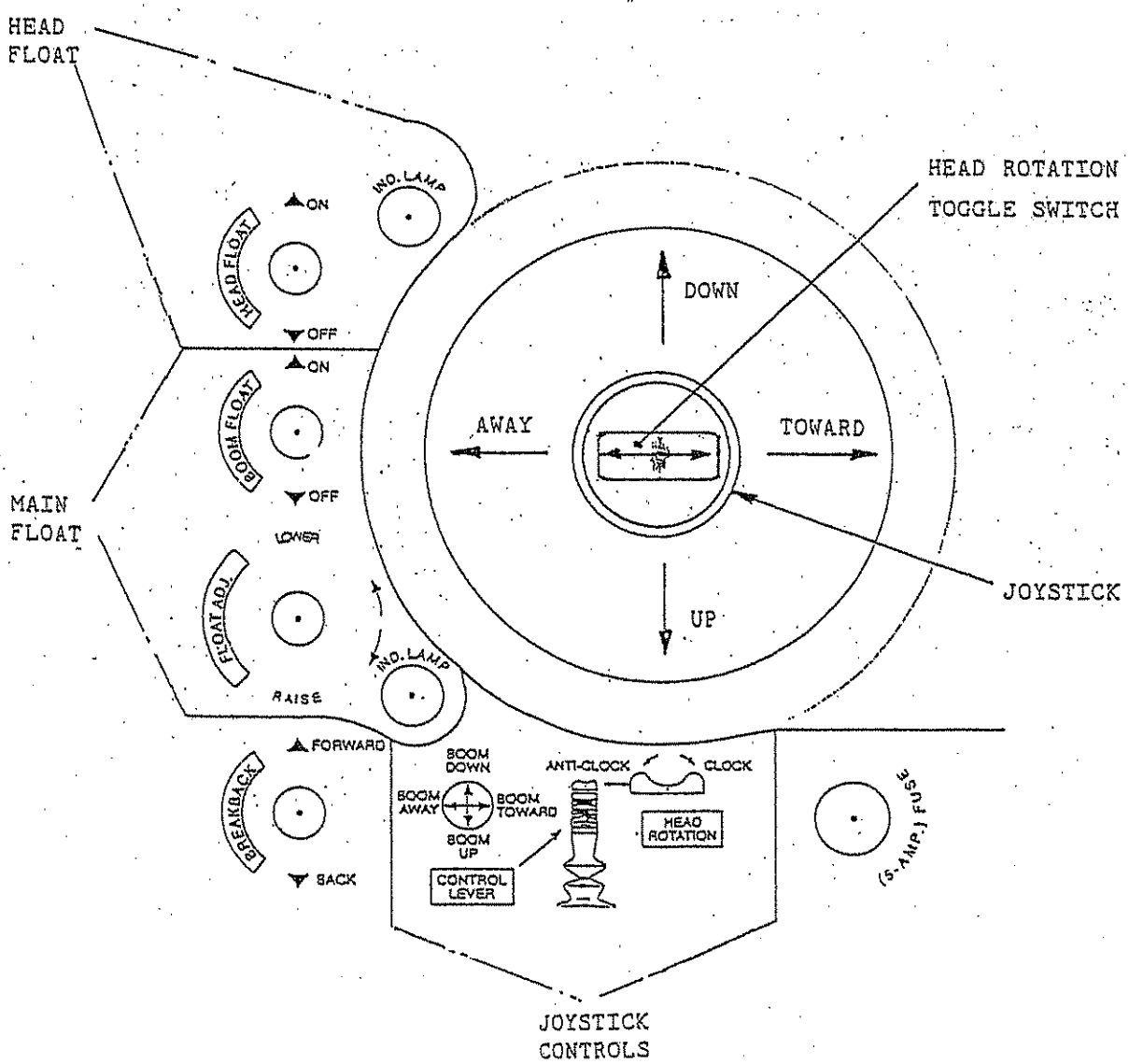

7736/sl/09/99

IMPORTANT

Note ensure setting of float gives a 'JUST HEAVY' position to prevent machine rising from work. By turning clockwise to find where machine rises and then turning anti clock to lower machine back to floor and then - add just a little more anti clock to settle (approx 1/2 of a turn).
(Final tuning must always be down to the individual operator).

Float can be overridden by moving joystick handle to raise or lower position. On returning joystick back to its neutral- central position the float will automatically come back into position.

NOTE:- If head is raised from the ground '(with float switch ON)' and handle is returned to neutral position - the head will gradually return to the floor, at this time normal float conditions will resume.

VERY IMPORTANT

Float switch must be in 'OFF' position if float not required.

HEAD FLOAT (Blue lamp)

Switch head float switch ON - (blue lamp will show)
-See drawing Page

This float allows head only to float about its centre pivot axis.

Note:- after prolonged use of float usage on banks/verges etc, a slight delay may occur when joystick top rocker switch is energised for head rotation (to recharge system).

VERY IMPORTANT

Float switch must be 'OFF' if float not required.

- - - * - - -

FUSE

Electrical system is protected by a 5 amp fuse (1in x 1/4in) BS1362.

- - - * - - -

7736/sl/09/99

EMERGENCY - MANUAL CONTROL LEVER (ELECTRIC MACHINE)

The Hydraulic Proportional Valve has a manual - control lever (included with every Electric Control Trimmer) which can be used should the Electronic System fail and not function. This manual option enables user/operator to operate Hydraulics and fold machine in order to move from site.

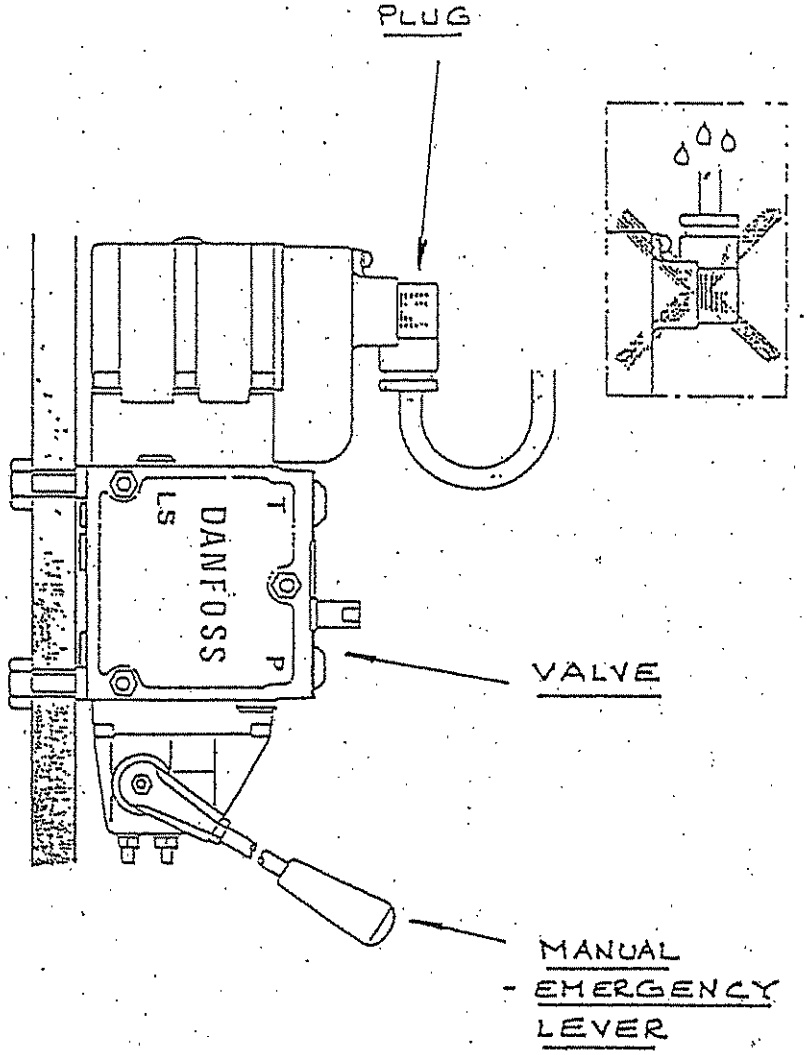

NOTE:- This Emergency valve lever will only function and operate machine provided Hydraulic system is working.

7736/sl/09/99

HYDRAULIC AND ELECTRICAL CIRCUIT

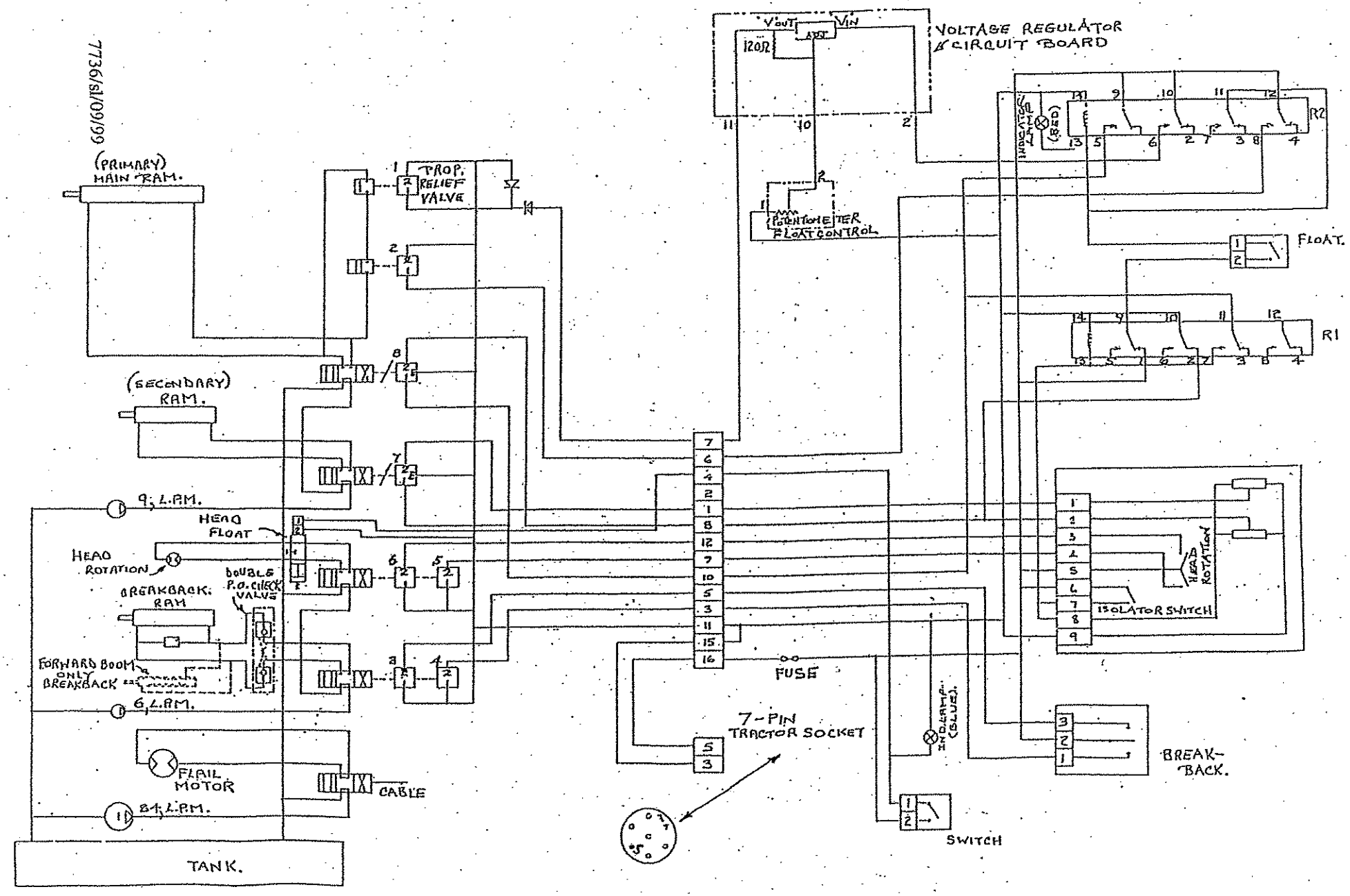

FAULT FINDING CHART

BREAKBACK RAM NOT OPERATIVE	CHECK FOR 12V ON PLUGS 3 & 4	FAULTY HYDRAULIC VALVE FAULTY WIRING OR SWITCH
BREAKBACK GIVES TO EASILY	RESET RELIEF VALVE ON RAM (SHOULD BE SET TO 2000 P.S.I)(136 BAR)	
NO HEAD ROTATION	CHECK FOR 12V ON PLUGS 5 & 6	FAULTY HYDRAULIC VALVE FAULTY WIRING OR DANFOSS SWITCH
SLOW HEAD ROTATION OR <360°	RELIEF VALVE NEEDS RE-SETTING (SHOULD BE SET TO 2250PSI) (153 BAR)	
SECOND RAM INOPERATIVE	CHECK FOR 12V ON PIN 1 AND 3-9V ON PIN 2 OF PLUG 7	FAULTY HYDRAULIC VALVE FAULTY WIRING OR DANFOSS CONTROL HANDLE
MAIN RAM INOPERATIVE	CHECK FOR 12V ON PIN 1 AND 3-9V ON PIN 2 OF PLUG 8	FAULTY HYDRAULIC VALVE FAULTY WIRING OR DANFOSS CONTROL HANDLE
	FLOAT ON/OFF VALVE STUCK IN OPEN POSITION - SEE FLOAT SYSTEM	

FAULT FINDING CHART CONTINUED

NO FLOAT LAMP ON	PROPORTIONAL RELIEF VALVE NOT WORKING - CHECK VOLTAGE ON PLUG 1. SHOULD RANGE FROM OV TO 9V AS FLOAT CONTROL KNOB IS TUNED	IS HYDRAULIC ON/OFF VALVE 2 OPERATING.	FAULTY PROPORTIONAL RELIEF VALVE	
		IF MACHINE AND TRACTOR SETTLE WHEN FLOAT SWITCH IS OPERATED THEN THIS VALVE IS WORKING	CHECK 12V ON PLUG 2	FAULTY HYDRAULIC VALVE
				FAULTY WIRING
		CHECK OUTPUT ON TERMINAL 11 ON VOLTAGE REGULATOR BOARD. (SHOULD BE 0V TO 9V)		FAULTY WIRING
				FAULTY BOARD OR POTENTIO-METER
	DANFOSS VALVE NOT OPERATING CHECK FOR 12V ON PLUG 8	FAULTY VALVE		
	NOTE:- THIS VALVE CAN BE VISUALLY CHECKED BY FITTING AN OPERATING LEVER & "MANUAL OPERATE" LOOKING FOR MOVEMENT.	FAULTY WIRING		
NO FLOAT LAMP OPER-ATE	FLOAT SWITCH FAULTY			

SUPPLEMENT FOR SUB-FRAME MOUNTED MACHINES ONLY.

FLAIL TRIMMERS - 460S 520S 580S

Edition No. 8177-02-99

8177/sb/0299

ATTACHING MACHINE TO TRACTOR

We assume here that machine is standing on a good level and firm base, as this is the requirement for when it was last parked.

Ensure area for attaching machine to tractor is free from any bystanders or onlookers.

READ AND UNDERSTAND the general and Health and Safety instructions given in this manual.

(Sub-frame Mounted Machine Only).

1. Fit rear axle brackets to the tractor (Technorton).

The brackets supplied will only be suitable for the model of tractor to which the hedge trimmer is to be fitted as they are made specifically to suit individual makes and models. For this reason it is important that the correct make and model of tractor was specified when the sub-frame kit was ordered.

A complete set of fitting instructions will accompany each set of axle brackets supplied. These instructions are supplied by the approved bracket manufacturer.

The brackets can either be fitted at 1000 or 1100 centres as shown below :

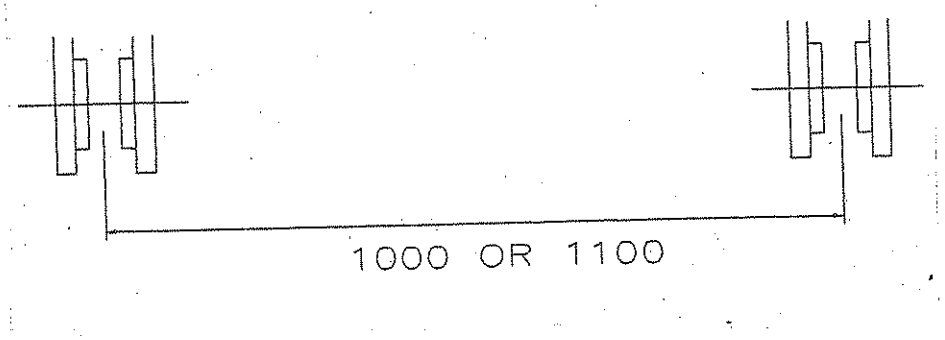

2. Setting sub-frame to suit tractor **(To be carried out by the dealer).**

The width of the brackets first needs to be set to suit the width at which the axle brackets were fitted, either 1000 or 1100 centres. This is shown in the diagram below.

Cranked jaw assemblies set for 1000 centres.

Cranked jaw assemblies now opposite and set for 1100 centres.

2.1 The overall length of the sub-frame now needs to be set

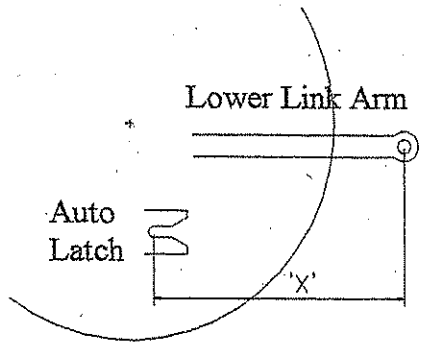

First set tractor link arm so that it is horizontal, then measure the horizontal distance between the centre of the lower link eye and the centre of the Auto latch, distance 'X'.

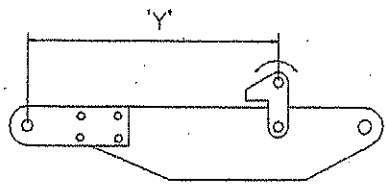

The cranked jaw assemblies must now be bolted to the sub-frame using the bolts supplied ensuring that the correct width is selected and that length 'Y' is the same as length 'X' (to within 50mm).

If this not achievable using the pre drilled holes, extra holes may need drilling.

The correct width and length should now be set.
To check the settings are correct :

a) Attach sub-frame to axle bracket latches making sure that they are 'home'.
b) With the rear of the sub-frame resting on the floor attach the lower link arms to the swinging links on the sub-frame ensuring this can be easily achieved within the arc movement of the link.
c) The sub-frame should now be carefully raised until horizontal ensuring at all times that the frame does not catch anything or that the swinging link on the sub-frame never reaches the end of its arc movement (adjust if necessary).
d) Now that the correct position of the cranked jaw assemblies has been achieved these jaw assemblies must now be welded to the sub-frame **100%** by a **QUALIFIED WELDER.**

Note :

The sub-frame must be welded complete before attaching to the hedge trimmer.

3. Sub-frame stand leg height.

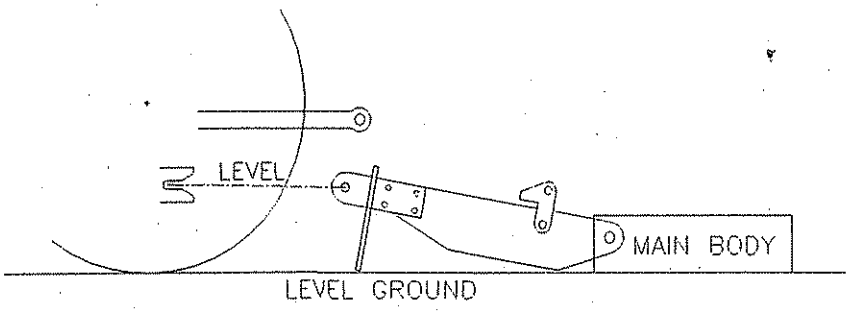

The sub-frame can now be attached to the hedge trimmer using the pins supplied. The height of the sub-frame stand leg can now be set so that the pins on the cranked jaws of the sub-frame are at the same height as the axle brackets (or up to 25mm below) when the hedge trimmer is parked on level ground (as shown above).

4. Attaching hedge trimmer to tractor.

A) First fit lower link balls to swing link bracket on sub-frame where tractor is fitted with automatic lower link coupling or remove the relevant pins from the swing links in the case where the tractor is fitted with conventional lower links ends.

b) Reverse tractor towards the sub-frame ensuring that it is inline while slowly lowering the link arms over the cross member towards the swing links. Ensuring the sub-frame is in the correct position for the axle brackets, keep reversing until the latches on the axle brackets are automatically tripped and locked.

c) The lower link arms should now be in the correct position for the auto hitch ends to pick up the link balls or for the bottom link pins to be inserted in the case of the conventional link ends, always use the correct pins as supplied and ensure that the auto hitch ends are used correctly.

d) The top link should now be fitted using the correct pins provided.

e) The trimmer should now be raised by operating the tractors three point linkage to a height where the PTO drive is approximately level, the arms should then be locked into position using the tractors hydraulic transport lock or the stops on the tractors quadrant control.

f) STOP TRACTOR ENGINE AND APPLY HANDBRAKE. The sub-frame stand leg can now be raised and held in position with the R-clip.